Appendix E: Construction Storm Water Pollution Prevention Plan Information Document for Yreka Creek Greenway Floodplain Construction Projects, City of Yreka

First Draft Date: December 10, 2015
Second Draft Date: January 16, 2016

Prepared for: City of Yreka
701 Fourth Street
Yreka, CA 96097

Prepared by: Geoscience Services (GeoServ)

Table of Contents

1.0 SWPPP Requirements 2
1.1 Introduction 2
1.2 Notice of Intent and SWPPP Development 3
1.3 SWPPP Implementation 6
1.4 Plan Availability 7
1.5 Plan Changes 7
1.6 Retention of Records 8
1.7 Signatory Requirements for Compliance Certification 8
1.8 Contractor/Trade Contractor/Subcontractor List 8
1.9 Notice of Termination (NOT) 9
2.0 Yreka Creek Subwatershed Baseline Conditions 9
2.1 Climate 9
2.2 Drainages and Surface Water Runoff 10
2.3 Geology and Soils 11
2.4 Geomorphology and Channelization 11
2.5 Water Quantity and Quality 11
2.6 Land Cover 12
3.0 Best Management Practices 12
3.1 Soil Stabilization BMPs 14
3.2 Sediment Control 15
3.3 Non-Storm Water Management 17
3.4 Waste Management and Materials Pollution Control 18
3.5 Spill Prevention and Control 19
3.6 BMP Maintenance 20
3.7 Post-Construction Storm Water Management Measures 20
3.8 Post Construction Water Balance Calculator 20
3.9 Project Post-Construction BMPs 21
4.0 Rain Event Action Plans (REAPs) 22
5.0 Training 23
6.0 Construction Site Monitoring Plan 25
6.1 CSMP Goals and Objectives 26
6.2 Discharge Prohibitions 26
6.3 Effluent Standards 26
6.4 Roles and Responsibilities for Storm Water Monitoring 28
6.5 Site Inspections (Visual Monitoring Observations) 29
6.6 Site Sampling 32
7.0 Corrective Actions 39
8.0 Reporting 40
8.1 Annual Report 40
8.2 NAL Exceedance 41
8.3 Report of Discharge 41

1.0 SWPPP Requirements

1.1 Introduction

This Storm Water Pollution Prevention Plan (SWPPP) Information Document is a reference for SWPPP developers and implementers that explains the difference between floodplain and stream channel restoration projects and typical earth-disturbing development projects, provides the basic information and data needed for SWPPP development for Yreka Creek Greenway projects, provides baseline information and data for projects within the Yreka Creek Subwatershed (HUC12: 180102070502), and provides typical BMPs for floodplain and stream channel restoration projects.

The main differences between Yreka Creek Greenway projects and traditional construction projects include the following:

1. reduce flood risk and improve ecosystem function;
2. do not include structural flood controls;
3. increase hydrological and biological complexity;
4. create riparian and wetland habitat;
5. remove fill from floodplains;
6. remove structures and roads out of floodplains;
7. reduce erosion and sedimentation; and
8. reduce impervious surface area.

Some traditional construction project implement similar types of restoration measures to mitigate development project impacts. For example, creating wetland to offset destroyed wetland. In effect, restoration projects are a regional mitigation measure and have an inherent anthropogenic and biological benefit. For any project with more than one acre of ground disturbance, a SWPPP must be prepared and submitted to the North Coast Regional Water Quality Control Board (RWQCB) for approval.

This SWPPP Information Document was prepared to comply with State Water Resources Control Board (SWRCB), Order No. 2009-009-DWQ, National Pollutant Discharge Elimination System (NPDES) General Permit No. CAS000002 Waste Discharge Requirements (WDRs) for Discharges of Storm water Associated with Construction Activity. The Construction General Permit (CGP) was adopted by the State Water Resources Control Board (SWRCB) on September 2, 2009 as Order No. 2009 009 DWQ. The SWPPP has five main objectives:

1. Providing written procedures to assure that all pollutants and their sources, including sources of sediment associated with construction, construction site erosion and all other activities associated with construction activity are controlled;
2. Identify non-storm water discharges and either eliminate, control, or treat them;
3. Select site Best Management Practices (BMPs) that are effective and result in the reduction or elimination of pollutants in storm water discharges and authorized

non-storm water discharges from construction activity to the Best Available Technology Economically Achievable (BAT) and the Best Conventional Pollutant Control Technology (BCT) standards;

4. Calculations and design details as well as BMP controls for site run-on are complete and correct; and
5. Stable BMPs are installed to reduce or eliminate pollutants after construction is completed.

1.2 Notice of Intent and SWPPP Development

To obtain coverage under the CGP, a Notice of Intent (NOI) must be submitted electronically to the SWRCB in the Storm water Multiple Application and Report Tracking System (SMARTS) database along with additional Permit Registration Documents (PRDs) for the project. The SMARTS database can be accessed at: https://smarts.waterboards.ca.gov/smarts/faces/SwSmartsLogin.jsp. An electronic copy of this SWPPP document will be submitted as part of the PRDs and shall be submitted at the time of the NOI. The SWPPP Developer or other data submitted will input the information required to submit the NOI into SMARTS. Once the permit fee is received, the SWRCB will issue a Waste Discharge Identification (WDID) number and send all applicable materials to the RWQCB, which then enforces the permit. A print out of the information submitted electronically in the NOI will be provided to the contractor by the RWQCB and shall be filed with the SWPPP.

Proposed Construction Activities

The SWPPP needs to provide a description of Yreka Creek Greenway project proposed construction activities:

- Project Description;
- Describe Project Activities (e.g., demo, site grading, unique site features);
- Project Start Date;
- Project End Date;
- Future Project Land Use (e.g., Flood Plain, Streets, Commercial, Private Parking Lots/Structure, Other);
- Acreage of Graded Area;
- Percent of Site to be Graded;
- Grading types (Cut, Fill, Cut and Fill);
- Estimated Cubic Yards to be Graded;
- Grading is Expected to be Balanced Onsite, Imported, or Exported;
- Locations of Stockpiles;
- Construction Activities and Phasing;
- Equipment Types; and
- Waste Management (e.g., Hazardous Waste Management, Solid Waste Management, Liquid Waste Management, Sanitary/Septic Waste Management, Other Concrete Waste Management).

Construction Schedule

The schedule needs to account for the timing and duration of instream work relative to expected high flows. Multi-year projects should be phased to reduce instream work during flooding. The project construction schedule is shown in an appendix of the SWPPP and summarized in the SWPPP report. The detail of the schedule will depend on project size and duration where large projects have in-depth schedules and phasing. The construction schedule should be updated on a regular basis to show changes in start or completion dates. These updates will be inserted into the SWPPP when changes are deemed necessary. Schedules shall include BMP implementation concerns and corrections.

Site Risk Level

Given the size, duration, and location of Yreka Creek Greenway projects, the risk level will typically be 2. The risk level determines the minimum level of BMPs, inspections, and sampling that will be acceptable with the project construction activities and the minimum level of site-specific monitoring and reporting that will be required. The risk level is based on project duration, proximity to water bodies, topography, and geologic and soil conditions. The risk level for the project is calculated based on the following site specific information which is completed in SMARTS:

- Location of project latitude and longitude;
- Project start and end date;
- Receiving water body name; and
- Erosion Risk.

This SWPPP information (NEED TO FINISH ONCE DATA AVAILABLE) document provides summarized data for the risk calculations. For the erosion risk determination, the Revised Universal Soil Loss Equation (RUSLE), duration of construction, and season(s) of construction area used to predict pre, during, and post construction surface erosion and sediment yield.

RUSLE input data include:

- Precipitation data (long term gage rainfall frequency statistics);
- Topographic data (pre and post construction using DEM and ground surveys);
- Soils data (regional and site); and
- Land cover data (USGS national coverage.

The pre, during, and post construction erosion rates are calculated using RUSLE as follows:

$A = R*C*K*LS*P$

A = Erosion Rate (tons/ac/yr)
R = Rainfall Erosivity Factor

C = Cover Factor
K = Soil Type Factor
LS = Slope Length and Steepness Factor
P = Practice Factor (e.g., BMPs)

The project areas can be subdivided into areas of similar topography to model ground conditions. Examples of the types of areas to be modeled include:

- Upland;
- Upper bank;
- Channel bottom;
- Cut and Fill slopes; and
- Roads, trails, parking lot, and landscape.

The soils types are given a base K value. The K is adjusted to account for the type of material and relative compaction. The erodibility nomograph typically includes:

- 15% rock (size > 2mm), 15 – 35% reduces K by 50 – 58%;
- 2% organic matter, 4% reduces K by 30 - 35%; and
- and compact soils increase K because of reduced permeability.

The RUSLE equation assumes that as the surface rock content increases the erosion potential decreases. Also, surface organic matter (e.g., straw mulch) reduces erodibility because it reduces the susceptibility of the soil to detachment, and it increases infiltration, which reduces storm water runoff.

The cover factors is used in the model pre and post construction surface conditions. The pre construction cover is determined from published tables of USGS cover type (e.g., native surface, paved, structures). The typical cover types used to model post construction conditions include:

- Topographic shaping and linear erosion control (e.g., C = 0.26);
- Seeded and mulched with >70% vegetative cover (e.g., C = 0.01);
- Seeded and mulched with <70% vegetative cover (e.g., C = 0.10); and
- Compacted soil, pavement, rock, and landscape cover.

Storm Water Run-on from Offsite Areas

Anticipated drainage patterns following the completion of major grading activities need to be analyzed in the SWPPP. The CGP requires that run-on from offsite areas will be prevented from flowing through areas that have been disturbed by construction unless appropriate conveyance systems are in place. The Subdrainage, precipitation, topographic, and soil data can be used to analyze the potential run-on from areas upslope of a given project. Most often, Greenway projects will have potential run-on.

Potential Construction Site Pollutants

Construction activities have the potential to generate pollutants in storm water discharges if no BMPs are implemented. Construction activities can be grouped into categories for the purpose of identifying likely pollutants.
The CGP requires that potential pollutant sources must be identified and products used and/or expected to be used and the end products produced are to be inventoried. Where possible, the locations of these potential pollutant sources are shown on the erosion control plan maps. Details of BMPs for controlling these pollutants are discussed in Section 3. The Hazardous Materials Inventory required by the Safety Plan may be used as a baseline of pollutants and updated to include other potential pollutants that are not hazardous materials and should be included in the SWPPP. This does not include materials and equipment that are designed to be outdoors and exposed to environmental conditions (i.e. poles, equipment pads, cabinets, conductors, insulators, bricks, etc.). Describe any special BMPs or hazardous material requirements, such as secondary containment, that are needed to contain the listed materials.

1.3 SWPPP Implementation

The CGP requires a Qualified SWPPP Practitioner (QSP) to oversee implementation of the BMPs required at a project site in order to ensure proper oversight of the BMPs. The QSP shall have primary responsibility and significant authority for the implementation, maintenance, inspection and amendments to the approved SWPPP. The QSP will be available at all times throughout the duration of the project. Duties of the QSP include but are not limited to:

- Ensuring full compliance with the SWPPP and the CGP;
- Implementing all elements of the SWPPP, including but not limited to implementation of prompt and effective erosion and sediment control measures;
- Implementing all non-storm water management, and materials and waste management activities such as: monitoring discharges (dewatering, diversion devices); general site clean-up; vehicle and equipment cleaning, fueling and maintenance; spill control; ensuring that no materials other than storm water are discharged in quantities which will have an adverse effect on receiving waters or storm drain systems;
- Implementing all aspects of the Construction Site Monitoring program including routine weekly, pre-, post- and daily storm event inspections (visual monitoring), quarterly non-storm water visual monitoring and required sampling for visible and non-visible pollutants;
- Ensuring elimination of all unauthorized discharges;
- The QSP shall be assigned authority by the Contractor to mobilize crews in order to make immediate repairs to the control measures or to respond to spills;
- Coordinating with the Contractor to assure all of the necessary corrections/repairs are made immediately, and that the project complies with the SWPPP, the CGP and approved plans at all times;

- Developing the Rain Event Action Plans (REAPs) for Risk Level 2 project sites and evaluating the adequacy of site BMPs prior to any likely precipitation events;
- Train any employees involved in the implementation of the SWPPP and its components. This includes training on use of spill kits and inspection and sampling procedures and methods; and
- Submitting Reports of Discharge, reports of illicit connections or illegal discharges and other required reports.

The QSP shall oversee all contractors, subcontractors, and individuals who have the potential to impact water quality. The Contractor is, required to appoint the QSP for the project. The QSP shall have the qualifications identified in Section 5 of the SWPPP.

1.4 Plan Availability

The SWPPP must be retained at the construction site during working hours from the date of project initiation to the date of termination of coverage under the CGP. If the SWPPP is retained by a crew member in a construction vehicle and is not at the project site, current copies of the BMPs and map/drawing will be left with the field crew and the original SWPPP shall be made available via request by telephone/radio. The SWPPP should be available at all times to site employees, and to representatives of City of Yreka, Siskiyou County, RWQCB, SWRCB, and/or United States Environmental Protection Agency (EPA).

1.5 Plan Changes

The CGP requires that the discharger amend the SWPPP whenever there is a change in project design, construction, or operations that may have a significant effect on the potential for discharge of pollutants to surface waters or groundwater. The SWPPP shall also be amended if the discharger violates any condition of the CGP or has not achieved the general objective of eliminating or minimizing pollutants in storm water discharges. If the RWQCB determines that the discharger is in violation of the CGP, the SWPPP should be amended and implemented in a timely manner, but in no case more than 14 calendar days after notification. In addition, the plan must be amended to identify any new contractor and/or subcontractor that will implement a measure of the SWPPP.

All amendments and revisions to the SWPPP shall be done by a Qualified SWPPP Developer (QSD). Amendments and revisions shall be dated and directly attached to the SWPPP. Minor adjustments to the placement, locations and amount of BMPs in response to observed deficiencies during required inspections or monitoring activities will be annotated on the erosion control map. When minor adjustments to BMPs aggregate to the point they change the runoff patterns, discharge locations or become significantly different from those described in the SWPPP, an amendment will be made by a QSD incorporating these changes into the SWPPP.

The QSD is responsible for updating the SWPPP to reflect current project site conditions and operations and adding documentation of training and inspection and monitoring results, as they occur. The following sections will require updating on a regular basis:

- Summary of SWPPP Amendments;
- Contractor/Subcontractor List;
- Inventory of Potential Pollutants Used or Stored on Site; and
- SWPPP Reportable Quantity Releases.

The documentation of ongoing inspections, monitoring, corrective actions and training shall be accomplished by ensuring the following forms are filled out when required and included in the appropriate SWPPP sections:

1. Site Inspections Forms; and
2. Training Reporting Forms.

1.6 Retention of Records

The SWPPP, including all required inspection reports, compliance certifications, reports of discharge, training records and records of data used to complete the NOI, must be retained for at least three years after the NOT has been approved by the State. The Contractor must maintain a copy of the SWPPP and inspection reports at the construction site from the date of project initiation to the date coverage under the CGP is terminated. If conditions remain that prevent the filing of an NOT immediately following completion of construction, the SWPPP requirements, including inspection and reporting must be completed until the NOT is filed.

1.7 Signatory Requirements for Compliance Certification

All Permit Registration Documents (PRDs) and NOTs shall be electronically signed, certified, and submitted via SMARTS by the LRP or the legally authorized signatory. The LRP or approved signatory shall certify and submit all Annual Reports, or other information required by the CGP or requested by the RWQCB, SWRCB, U.S. EPA, or local storm water management agency.

1.8 Contractor/Trade Contractor/Subcontractor List

Contractors, Trade contractors, and Subcontractors who will work on the site need to be recorded. A list shall be kept current throughout the construction project. Each contractor, trade contractor, and subcontractor shall have access to copies of applicable sections of the SWPPP or equivalent documents prior to commencement of construction. Contractors, trade contractors, and subcontractors shall receive training on the site specific SWPPP requirements that affect their work according to Section 5 of this document.

1.9 Notice of Termination (NOT)

To terminate coverage under the CGP, a NOT must be submitted. A NOT should be filed within ninety (90) days of completion of construction. The NOT shall be electronically submitted to the SWQCB via SMARTS when the construction project is complete or ownership has been transferred. A project is considered complete when the following conditions have been met:

1. The site will not pose any additional sediment discharge risk than it did prior to the commencement of construction activity;
2. There is no potential for construction-related storm water pollutants to be discharged into site runoff;
3. Final stabilization has been reached;
4. Construction materials and wastes have been disposed of properly;
5. Compliance with the post-construction standards (Section XIII) of the CGP has been demonstrated;
6. Post-construction storm water management measures have been installed and a long-term maintenance plan has been established according to the SWPPP and Water Quality Technical Report (WQTR); and
7. All construction-related equipment, materials and any temporary BMPs no longer needed are removed from the site.
8. In order to terminate coverage under the CGP, final stabilization conditions must be satisfied in the NOT. The NOT must attain final stabilization by one of the following methods:
9. 70% final cover method - no computational proof required; or
10. RUSLE or RUSLE2 method – computational proof required (see risk level section above); or
11. Custom method – the discharger shall demonstrate in some other manner than above that the site complies with the final stabilization.

2.0 Yreka Creek Subwatershed Baseline Conditions

This SWPPP Information Document established a spatial data base of baseline conditions for the Yreka Creek Subwatershed. Construction SWPPP developers can use this database to aid in SWPPP development, risk factor calculations, and post construction water balance calculations. Base maps are shown in Appendix A. The following provides a baseline summary of conditions effecting SWPPP development and implementation in the Yreka Creek Subwatershed.

2.1 Climate

The City of Yreka is in a semi-arid climate zone (steppe climate) with an average air temperature of 54 ^{o}F and an average precipitation of about 18 inches per year. Most of the precipitation falls between October and May, and the timing and duration of precipitation events is highly variable. The amount of precipitation varies spatially and

there are measured differences in average precipitation for long term precipitation gages within 2.5 mile of one another. This is typical of a steppe climate zone and is in part due to high intensity thunderstorms that occur during the summer months and can produce very localized measurable precipitation.

Construction SWPPPs should use the best available precipitation gages to design and implement the BMPs. During and after construction, each project should collect local rain gage data to document the actual rainfall at the site.

There are several government operated weather stations near the site. The hydrology study used the following rain gages: Fort Jones; Montague; and Yreka.

BMPs are developed assuming a certain design storm (defined as the storm producing a rainfall amount for a specified BMPs capacity). Compliance thresholds are needed for storm events above and beyond the design storms assumed to determine the technology based NELs. For Risk Level 3 project sites applicable to NELs, this CGP establishes a compliance storm event as the equivalent rainfall in a 5-year, 24-hour storm. This compliance storm was chosen due to its relative infrequent occurrence and the fact that the runoff volume associated with it is not as large as a 10-year, 24-hour storm event. The discharger shall determine this value using Western 2009-0009-DWQ as amended by 2010-0014-DWQ September 2, 2009 as modified on November 16, 2010 Regional Climate Center Precipitation Frequency Maps9 for 5-year 24-hour storm events in Northern and Southern California.

2.2 Drainages and Surface Water Runoff

The City of Yreka is within the Yreka Creek Subwatershed (HUC12: 180102070502) that drains to the Shasta River (Appendix A, Figure 1). This Subwatershed has a drainage area of 33,453 acres and about 105 miles of active stream channel. The Yreka Creek Subwatershed was sub-divided into 7 Drainages and 66 Subdrainages (Appendix A, Figure 1 and Table X). The main channels of Yreka Creek and tributaries were also named for planning purposes. There are seven delineated subreaches within Yreka Creek that are subdivided based on tributary confluences and planning needs (Appendix A, Figure 1 and Table X). Construction SWPPPs should reference which Drainage, Subdrainage(s), and Subreach(s) the project is within.

For Yreka Creek, surface water runoff occurs when rainfall rates exceed the soil infiltration rates. Infrequently, runoff is produced by rain-on-snow events where cold heavy snow events are followed by warm air masses that rapidly melt snow throughout the drainage. Most of the very large floods are a result of rain-on-snow events.

2.3 Geology and Soils

The rocks and soils that underlie the City of Yreka are of the Cascade Mountains and Klamath Mountains Geomorphic Provinces (Appendix A, Figure 2) (Jennings 1977 and Hotz 1978). To the east of Yreka are the Cascade Mountains that are ancestral volcanic areas that were active during the Eocene (56 to 34 million years ago). To the west of Yreka are the Klamath Mountains that are metamorphic and igneous rocks part of the Eastern Jurassic Belt that are 541 to 252 million years old (Appendix A, Figure 2). Most of the Yreka Creek watershed drains the Klamath Mountains from the south and west.

The topography within the City of Yreka is an expression of these relatively young volcanic deposits adjacent to the eastern edge of the Klamath Mountains. Most of the city is within relatively flat Quaternary Alluvium deposited in low areas and is steepest to the west. The rocks of the Klamath Mountains have been reworked by fluvial and glacial action over the past 1 million years. Alluvial, glacial, and mass wasting deposits form the modern topography within the city. Quaternary alluvial forms the floodplains within the City of Yreka (Hotz 1978) (Appendix A, Figure 2).

There are several mapped soil units within the city. Most of the Yreka Creek Greenway construction projects will occur within Dumps (Map Unit 145) (0 to 5% slope) which is moderately deep and moderately drained (Appendix A, Figure 3).

Yreka Creek was dredged and tunneled to mine placer gold deposits within the Quaternary Alluvium. Most of the mainstem of Yreka and Greenhorn Creeks were turned over and the alluvial deposits were tunneled throughout the city. Dredge tailings are still present along Yreka Creek. Abandon vertical and horizontal mine shafts are still found beneath the city streets and buildings.

2.4 Geomorphology and Channelization

The geomorphology and history of channelization are described in the Geomorphology Report.

2.5 Water Quantity and Quality

The water quantity of Yreka creek is described in the Hydrology Report. Given the semi-arid climate and drainage area of Yreka Creek, the base flows are relatively low. There is very little spring snow melt contribution to the annual runoff. Groundwater contributes to base flow during dry periods. High flows are driven by storm events that rapidly raise the water level from less than 1 foot to over 10 feet in places. Once the storm event is over, the water level rapidly drops to pre storm conditions.

There are limited long term stream flow data for Yreka Creek. (NEED JH FLOW DATA). Groundwater levels are relatively shallow along Yreka Creek with the general groundwater flow direction to the north and east. The local groundwater levels are connected to the creek water levels and vary by season.

The water quality of Yreka Creek is generally good and is most limited by low-summer base flows. During the late summer and early fall, most of Yreka Creek becomes intermittent especially during drought periods.

2.6 Land Cover

The land directly surrounding Yreka Creek is urbanized. Farther from the creek, the land tends to be undeveloped and moderately roaded. USGS land cover data were used to summarize the land cover types, area, and distribution within the Yreka Creek Subwatershed.

3.0 Best Management Practices

This SWPPP Information Document provides guidance for SWPPP preparation and implementation associated with build-out of the Yreka Creek Greenway. Greenway build-out will include construction of readily-accessible floodplain areas which, by design, are intended to have water flow over them, including during the first wet season following construction. The BMPs presented herein account for the local climate, runoff patterns, soils, and floodplain functionality and were in part developed from lessons learned from previous flood plain restoration project in Yreka and other northern California watersheds and are listed in Appendix B.

The CGP describes specific BMPs that are required to minimize or prevent pollutants in storm water runoff. BMPs are controls, structures and management practices that are selected and adapted to the project site to achieve the best conventional control technology (BCT) for traditional pollutants, such as sediment, and the best available technology economically available (BAT) for toxic pollutants and non-conventional pollutants. The permit requires the developer/owner to choose the most economical, effective, and possibly innovative BMPs to reduce or eliminate pollutants in runoff. The BMPs described in this section are designed to meet the CGP requirements while accounting for floodplain function.

The permit contains specific requirements for Run-on and Run-off, Erosion (Site Stabilization), Sediment controls, and Housekeeping BMPs, including Material and Waste Management and Non-Storm Water BMPs. The following subsections contain BMP checklists that indicate the recommended BMPs that will be implemented on Yreka Creek Greenway projects. These BMPs were selected by considering the:

1. The quantity, physical characteristics, and locations of each potential pollutant source;
2. The volume of on site run-on and runoff;

3. The degree to which pollutants associated with these materials may be exposed or mobilized by contact with storm water or authorized non-storm water discharges; and
4. The direct or indirect pathways that pollutants may be exposed to storm water or authorized non-storm water discharges.

Greenway Construction project designs need to include BMPs applicable to the site conditions. Given the nature of Greenway projects, non-traditional BMPs can be used to control storm water discharge. BMPs need to designed using the approved design storms. During construction, the BMP design storm is the 10-year, 6-hour rainfall event. Post construction, the design storm is the 85th percentile, 24-hour rainfall event.

The construction contractors shall implement the following measures throughout construction to prevent increased erosion and short-term sedimentation of Yreka Creek:

1. Areas where ground disturbance will need to occur shall be identified in advance of
2. construction and limited to only those areas that have been approved by the City o Yreka;
3. All construction vehicular traffic shall be confined to the designated access routes
4. and staging area;
5. Disturbance shall be limited to the minimum necessary to complete construction activities;
6. All supervisory construction personnel shall be informed of environmental
7. concerns, permit conditions, and final BMP specifications;
8. The construction contractors shall prepare a SWPPP;
9. Measures for erosion control will be prioritized based on proximity to the river;
10. Exposed areas within 50 feet of the Creek will be shaped to drain to depressions or swales to reduce potential sediment from reaching the Creek;

The following measures shall be used as a guide to develop the engineering design and the SWPPP:

1. Restore disturbed areas to preconstruction contours to the extent feasible;
2. Salvage, store, and use the highest quality soil for re-vegetation;
3. Discourage noxious weed competition and control noxious weeds;
4. Clear or remove roots from steep slopes immediately prior to scheduled construction;
5. Leave drainage gaps in topsoil and spoil piles to accommodate surface water runoff;
6. To the extent possible, cease excavation activities during significantly wet or windy weather;
7. Use bales and/or silt fencing as appropriate but not within the ordinary high water mark (i.e., Q_2 flood);

8. Before seeding disturbed soils, work the topsoil to reduce compaction caused by construction vehicle traffic;
9. Perimeter controls and detention basins shall be placed below all construction activities at the edge of the active stream channel and other surface water features to intercept sediment before it reaches the waterway, and these structures shall be installed prior to any grubbing or grading activities;
10. Spoil sites shall be located such that they do not drain directly into a surface water feature, if possible, and if a spoil site drains into a surface water feature, topographic shaping and/or detention basins shall be constructed to intercept sediment before it reaches the feature;
11. Spoil sites shall be graded and vegetated to reduce the potential for erosion;
12. Sediment control measures shall be in place prior to the onset of the rainy season and will be monitored and maintained in good working condition until disturbed areas have been stabilized.
13. If work activities take place during the rainy season, then erosion control structures must be in place and operational at the end of each construction day.
14. The contractor will develop the erosion and sedimentation control plan in conjunction with City of Yreka and in cooperation with the CDFW, NMFS, USFWS, and NCRWQCB;
15. The Project Engineer and QSP will ensure the preparation and implementation of an erosion and sediment control plan prior to the start of construction.

3.1 Soil Stabilization BMPs

Erosion control, also referred to as soil stabilization, consists of source control measures that are designed to prevent soil particles from detaching and becoming transported in storm water runoff or by wind. Erosion control BMPs protects the soil surface by covering and/or binding soil particles. Depending on the soil and cover types, projects may need to incorporate erosion control (including wind control) (Appendix B). Projects will implement the following minimum practices for effective temporary and final soil stabilization during construction:

1. Effective wind erosion control;
2. Soil cover for inactive areas and all finished slopes; and
3. Limit the use of plastic materials when more sustainable, environmentally friendly alternatives exist.

Projects shall implement appropriate erosion control BMPs (runoff control and soil stabilization) in conjunction with sediment control BMPs for areas under active construction. Run-on, runoff within the site and runoff that discharges off the site will be effectively managed. Run-on to the site shall be effectively managed by directing run-on away from disturbed areas.

Inactive areas of construction are areas that have been disturbed by construction activity that are not scheduled to be re-disturbed for at least 14 days. Active areas of

construction area areas undergoing land surface disturbance. This includes construction activity in all phases of construction.

Sufficient erosion control materials will be maintained onsite to allow implementation of corrective actions in conformance with the CGP requirements in a timely manner. This includes implementation requirements for active and non-active areas that require deployment of additional BMPs before the onset of rain. Implementation and locations of temporary erosion control BMPs need to be shown on the SWPPP maps and described in the report.

BMPs will be deployed in a sequence to follow the progress of various project phases including grading, demolition, and construction. As the locations of soil disturbance change, erosion and sedimentation controls will be adjusted accordingly to control storm water runoff at the downgrade perimeter and drain inlets. BMPs will be mobilized as follows:

- The project schedule will sequence construction activities with the installation of erosion control measures. The construction schedule will be arranged as much as practicable to leave existing vegetation undisturbed until immediately prior to grading;
- The QSP will monitor weather using National Weather Service reports (http://www.srh.noaa.gov/) to track conditions and alert crews to the onset of rainfall events;
- All BMPs will be inspected to verify that are properly implemented and to determine the need for corrective action as described in Section 6.3;
- Inactive disturbed soil areas will be stabilized with temporary or permanent erosion control before rain events;
- Disturbed soil areas that are substantially complete will be stabilized with permanent erosion control and vegetation (if within seeding window for seed establishment);
- Prior to forecasted storm events, temporary erosion control BMPs will be deployed as needed, and inspected; and
- The project will maintain appropriate and sufficient temporary erosion control BMPs and BMP materials onsite throughout the life of the project to make necessary correction actions identified in routine and rain event inspections in a timely manner.

3.2 Sediment Control

Sediment controls are structural measures that are intended to complement and enhance the erosion control (soil stabilization) measures and reduce sediment discharges from construction areas. Sediment controls are designed to intercept soil particles that have been detached and transported by the force of water(Appendix B).

The CGP requires the specific BMPs for perimeter controls, construction entrances and exits, run-on and runoff controls and inlet protection. Specifically:

Perimeter controls: Sediment control BMPs will be installed at all appropriate locations along the site perimeter at all times during the project. The CGP also requires that all run-on, all runoff within the site and all runoff discharging off the site be effectively managed. The following BMPs will be implemented to divert the run-on from offsite areas around disturbed areas of the project site. The will be controlled within the site and prior to discharging off the site by the BMPs selected in the table below.

Construction entrances and exits: These locations shall be stabilized to sufficiently control erosion and sediment discharges from the site. Construction activity traffic to and from the project will be limited to entrances and exits that employ effective controls to prevent offsite tracking of sediment.
This project will incorporate minimum temporary sediment controls required by the CGP, contract documents, and other considerations the QSD determines necessary to meet the discharge prohibitions.

Temporary sediment control materials, equivalent to approximately 10% of the installed quantities on the site will be maintained onsite throughout the duration of the project to allow implementation of corrective actions in response to breaches, failures or emergencies or as a result of required inspections. Prior to disturbing a new area, additional temporary sediment control materials necessary to protect this disturbed area will be stored onsite.

For Risk Level 2 projects, the following additional BMP requirements will be implemented:
Appropriate erosion control BMPs (runoff control and soil stabilization) will be installed in conjunction with sediment control BMPs for areas under active construction.
Linear sediment controls will be installed along the toe of the slope, face of the slope, and at the grade breaks of exposed slopes to comply with BMP design criteria.

Sediment delivery points and perimeter controls, runoff control BMPs, and pollutant controls at entrances and exits (e.g., armoring) will be maintained and protected from activities that reduce their effectiveness. Immediate access roads will be inspected on a daily basis. When necessary and prior to any rain event, any sediment or other construction activity-related materials that are deposited on the roads will be removed.
The following sediment control BMP consideration checklist indicates the BMPs that will be implemented to control sediment on the construction site. The BMP selected to meet the specific CGP required controls (perimeter controls, wind controls, etc.) should be annotated.

Implementation and locations of temporary sediment control BMPs are shown on the SWPPP maps and drawings. The BMP working details that will be adhered to are found in Appendix B.

- Temporary sediment control BMPs will be deployed according to the schedule shown in SWPPP Section 2.4;
- When rain is anticipated, temporary sediment controls will be implemented at the draining perimeter of disturbed soil areas, at the toe of exterior slopes, at storm drain inlets and at outfall areas, as needed; and
- In the event of a predicted storm, temporary sediment control materials will be maintained onsite.

3.3 Non-Storm Water Management

Authorized non-storm water discharges may include those from dechlorinated potable water sources provided the discharge prohibitions are met and the discharges are not subject to a separate permit adopted by the Regional Water Quality Control Board. All other non-storm water discharges must be controlled through appropriate management practices and BMPs (Appendix B). An inventory of construction activities and potential non-storm water discharges is provided in Section 2.8.

The CGP specifically requires management or structural BMPs to ensure the following requirements are met:

1. Vehicles shall be washed in such a manner to prevent non-storm water discharges to drainage systems;
2. Streets shall be cleaned in such a manner to prevent unauthorized storm water discharges; and
3. Prevent disposal of any rinse or wash waters or materials on impervious or pervious site surfaces or into the storm drain system.

Implement good housekeeping measures for vehicle storage and maintenance to prevent oils, grease or fuel from leaking into the ground, storm drains or surface waters. Fuel all equipment and vehicles in a designated area with appropriate BMPs and clean leaks and dispose of leaking materials immediately. Ensure the containment of concrete washout areas and other washout areas that may contain additional pollutants so there is no discharge into the underlying soil and onto the surrounding areas.

The following BMP consideration checklist indicates the BMPs that have been selected to control non-storm water pollution on the construction site. Implementation and locations of non-storm water control BMPs are shown on the SWPPP maps and drawings.

3.4 Waste Management and Materials Pollution Control

Good site "Housekeeping" measures will be implemented to minimize the potential threat to water quality from site operations including the storage of construction materials, the application and storage of landscape materials and management of wastes and waste materials on site (Appendix B). Construction site debris, including trash, is a prohibited discharge in the CGP. An inventory of construction activities and potential materials to be utilized and waste to be generated is provided in Section 2.8. The CGP specifically requires management or structural BMPs to ensure the following requirements are met:

Construction Material Management:

- Store chemicals in watertight containers (with appropriate secondary containment to prevent any spillage or leakage) or in a storage shed (completely enclosed);
- Minimize exposure of construction materials to precipitation;
- Cover and berm loose stockpiled construction materials that are not actively being used (i.e. soil, spoils, aggregate, fly-ash, stucco, hydrated line, etc.);
- Implement BMPs to prevent the off-site tracking of loose construction and landscape materials; and
- Implement good housekeeping measures on the construction site to control the air deposition of site materials (sediment, trash, metals, nutrients, bacterial, oil and grease and organics) and from site operations.

Landscape Material Management:
Contain stockpiled materials such as mulches and topsoil when they are not actively being used;
Contain fertilizers and other landscape materials when they are not actively being used;
Discontinue the application of any erodible landscape material within 2 days before a forecasted rain event or during periods of precipitation;
Apply erodible landscape material at quantities and application rates according to manufacture recommendations or based on written specifications by knowledgeable and experienced field personnel; and
Stack erodible landscape material on pallets and covering or storing such materials when not being used or applied.

Waste Management:

- Ensure the containment of sanitation facilities (e.g., portable toilets) to prevent discharges of pollutants to the storm water drainage system or receiving water;
- Clean or replace sanitation facilities and inspecting them regularly for leaks and spills;
- Cover waste disposal containers at the end of every business day and during a rain event;

- Ensure the containment of concrete washout areas and other washout areas that may contain additional pollutants so there is no discharge into the underlying soil and onto the surrounding areas;
- Prevent discharges from waste disposal containers to the storm water drainage system or receiving water; and
- Contain and securely protect stockpiled waste material from wind and rain at all times unless actively being used.

The following BMP consideration checklist indicates the BMPs that have been selected to control construction site wastes and materials. Implementation and locations of the central material handling and waste management BMPs are shown on the SWPPP maps. The BMP Factsheets that describe the working details of these BMPs are found in Appendix A. The following list of BMPs and narrative explains how the selected BMPs will be incorporated into the project:

All materials and wastes will be stored in the designated locations at the end of each day and in the event of anticipated rain. All waste materials generated onsite will be removed in accordance with the contract documents. Implementation of Waste Management and Material Pollution Control BMPs.

3.5 Spill Prevention and Control

On-site procedures will be developed to effectively address hazardous and non-hazardous spills prior to the start of construction. Equipment and materials for the cleanup of spills will be available on site throughout the life of the project. Minor spills and leaks will be cleaned up immediately and disposed of properly by the responsible personnel. Spill kits will be located in accessible areas for all construction activity and should include materials to address potential spill types. All personnel with the potential to cause or witness a spill will be trained in use of the spill kits for cleanup and procedures to initiate a formal spill response. Training for workers in the use of spill kits and emergency response procedures will be documented on the training forms in the SWPPP. Appropriate spill response personnel are assigned for the project and are trained in spill response for larger spills beyond the capabilities of on-site personnel (Appendix B).

The SWPPP reportable quantities table will be completed for any release of petroleum products or sewage that enters a storm drain and are not fully contained and/or reach a receiving water body, any release 5 gallons or greater of potentially hazardous material, and/or any Reportable Quantity spill of hazardous materials (as established under 40 CFR Part 1101, 40 CFR Part 1172, or 40 CFR 3023) that occurs on site; 140 CFR Part 110 addresses the discharge of oil in such quantities as may be harmful pursuant to Section 311(b)(4) of the Clean Water Act; 240 CFR Part 117 addresses the determination of such quantities of hazardous substances that may be harmful pursuant to Section 311(b)(3)

of the Clean Water Act; 340 CFR Part 302 addresses the designation, reportable quantities, and notification requirements for the release of substances designated under Section 311(b)(2)(A) of the Clean Water Act.

3.6 BMP Maintenance

Maintenance of BMPs need to be performed in accordance with the project design and the BMPs selected in the project SWPPP. Maintenance will be performed within 72 hours of the inspection that identified the maintenance need or immediately prior to a forecasted storm event, whichever occurs first.

3.7 Post-Construction Storm Water Management Measures

The post-construction BMP system will be comprised of site design elements, source controls that are non-structural, and treatment controls that are structural in nature.

3.8 Post Construction Water Balance Calculator

Construction projects will demonstrate compliance with the requirements of the CGP (Section XIII. Post-Construction Standards) by submitting a map and worksheets with the NOI in accordance with Appendix 2 of the CGP. The pre-and post-impervious areas, soil conditions, and proposed non-structural BMPs for each Subdrainage area within the City of Yreka limits must be analyzed to determine the volume of increased runoff and available credits to determine the requirement for structural BMPs. An Excel template worksheet is shown in Appendix C. Ultimately, the water balance calculations are completed and documented in SMARTS.

Credits to offset an increase in impervious area can be obtained by the pure nature of the Greenway projects. In cases where additional BMPs are needed, improving soil quality, planting trees and other vegetation, rain barrels or cisterns, creating wetlands, and protecting stream buffers. Where sufficient credits from non-structural BMPs cannot be obtained, the excess volume must be captured in structural practices and approved by the RWQCB.

When seeking RWQCB approval for the use of structural practices, it must be demonstrated why non-structural practices are not feasible, or else document that there will be less water quality impacts using structural practices. For sites disturbing greater than 2 acres with drainage areas discharging to a first order stream, the pre-construction drainage density will be preserved and ensure that the post construction time of runoff concentration is equal to or greater than pre-project time of concentration.

A first order stream is a stream with no tributaries. The water balance must be performed for the smallest storms up to the 85th percentile storm event (or the

smallest storm event that generates runoff, whichever is larger). For Greenway projects the typical 85th percentile storm is 0.78 inches in 24 hours (see Hydrology Report).

3.9 Project Post-Construction BMPs

Post-construction BMPs have been incorporated into the project to improve site design to reduce runoff and protect water quality. Some of these BMPs may be able to be used as credits in the Water Balance Calculator spreadsheet to offset the increased runoff volume for the project, provided they meet the offset requirements.
Source control BMPs are maintenance measures and program implemented to reduce the potential for pollutants to enter the storm water from the project site. All projects should include the stenciling of storm drain inlets and the covering of refuse areas as source control BMPs.

The various site design, source control, and treatment control BMPs that will be determined as part of SWPPP development. BMPs are available for offset credits in the water balance calculation.

Post-Construction BMPs:

- Non-Rooftop Impervious Area Disconnection-Drain sidewalks, parking lots into adjacent landscape areas or foundation planters;
- Porous Pavement - Use permeable materials for private sidewalks, driveways, parking lots, and interior roadway surfaces;
- Dry Wells;
- Downspout Disconnection - Direct rooftop runoff to pervious areas such as yards, open channels, or vegetated;
- Tree Planting- Maximizing canopy interception and water conservation by preserving existing native trees and shrubs, and planting additional native or drought tolerant trees and large shrubs;
- Vegetated Swale - Designed in accordance with Treatment Control BMP 30 (TC-30 - Vegetated Swale) from the California Storm water BMP Handbook, New Development and Redevelopment;
- Rain Barrels and Cisterns;
- Soil Amendments - Obtain ideal bulk densities for the top 12 inches of soil in landscaped areas;
- Maintaining Stream Buffers;
- Use of natural drainage systems to the maximum extent practicable;
- Stabilized permanent channel crossings;
- Planting native or drought tolerant vegetation on slopes;
- Energy dissipaters, such as riprap, at the outlets of new storm drains, culverts conduits, or channels that enter unlined channels; and
- Green Roofs.

Source Control BMPs:

- Storm drain system stenciling and signage
- Outdoor material and trash storage area designed to reduce or control rainfall runoff;
- Landscape Irrigation Controls;
- Street Sweeping and Catch Basin Cleaning; and
- Landscape Irrigation Controls.

Structural or Treatment Control BMPs:

- Bio-swales;
- Grass swale;
- Grass strips;
- Wetland vegetation swale;
- Bio-retention;
- Extended/dry detention basin with grass lining;
- Extended/dry detention basin with impervious lining;
- Infiltration basin;
- Infiltration trench;
- Porous asphalt;
- Porous concrete;
- Porous modular concrete block;
- Wet pond (permanent pool);
- Constructed wetland;
- Media filtration;
- Sand filtration;
- High-rate bio-filters;
- Hydrodynamic Separation Systems;
- Swirl Concentrator;
- Cyclone Separator;
- Oil/Water Separators; and
- Other BMPs as listed in Appendix B.

4.0 Rain Event Action Plans (REAPs)

The REAP will be designed and prepared as a formal plan to protect all exposed portions of the project site and to ensure there are adequate materials, staff, and time to implement erosion and sediment control measures that are intended to reduce the amount of sediment and other pollutants that can be generated during a rain event. A REAP will be developed by the project's QSP for each construction phase of a Risk Level 2 project, so there may be multiple REAPs throughout the life of the project.

The QSP will monitor forecasted rain events using the information from the National Weather Service Forecast Office website and entering the project location. The REAP will be developed 48 hours prior to any precipitation event forecasted to have a 50% or greater chance of producing precipitation (>0.5 inches) in the project area.

Documentation of forecasts relied upon to determine if a REAP should be prepared and implemented should be retained with the SWPPP. The REAP will be implemented 24 hours prior to any predicted precipitation event. The REAP will be maintained on site with the SWPPP. The REAP shall be specific to the project phase currently in construction. A sample REAP template is provided in Appendix C. Completed REAPS shall be filed in the project SWPPP. At a minimum the REAP will include the following:

1. Site address;
2. Calculated Risk Level;
3. Site storm water manager information including the name, company, and 24-hour emergency telephone number;
4. Erosion and sediment control provider information including the name, company, and 24-hour emergency telephone number;
5. Storm water sampling agent information including the name, company, and 24-hour emergency telephone number;
6. Activities associated with each construction phase;
7. Trades active on the construction site during each construction phase;
8. Trade contractor information; and
9. Suggested actions for each project phase.

5.0 Training

The SWPPP must include procedures to ensure that all personnel responsible for implementing the SWPPP and personnel performing the inspections are appropriately trained according to the Permit. Training should be both formal and informal, occur on an ongoing basis, and should include training offered by recognized governmental agencies or professional organizations. When properly trained, site personnel are more capable of managing materials properly, preventing spills, and implementing BMPs efficiently and correctly.

A Qualified SWPPP Developer (QSD) shall be designated to write, amend, and certify the SWPPP. The QSD shall have one of the following registrations or certifications and appropriate experience:

- A California registered professional civil engineer;
- A California registered professional geologist or engineering geologist;
- A California registered landscape architect;
- A professional hydrologist registered through the American Institute of Hydrology;

- A Certified Professional in Erosion and Sediment Control (CPESC) registered through Enviro Cert International, Inc.;
- A Certified Professional in Storm water Quality (CPSWQ) registered through Enviro Cert International, Inc.; or
- A professional in erosion and sediment control registered through the National Institute for Certification in Engineering Technologies (NICET).
- Effective September 2, 2011, the QSD shall have attended a State Water Board-sponsored or approved QSD training course.

The Contractor shall designate a Qualified SWPPP Practitioner (QSP) who shall be the primary contact for issues related to the SWPPP or its implementation. The QSP shall be appropriately trained. Effective September 2, 2011, the QSP shall be either a Qualified SWPPP Developer or have one of the following certifications, AND the listed State sponsored training:

- A certified erosion, sediment and storm water inspector (CESSWI) registered through Enviro Cert International, Inc.;
- A certified inspector of sediment and erosion control (CISEC) registered through Certified Inspector of Sediment and Erosion Control, Inc; or
- The QSP shall have attended a State Water Board-sponsored or approved QSP training course.

The SWPPP shall include evidence of training or certification for the QSD and the QSP. The QSP is responsible for the tasks discussed in Section 1.3 of this SWPPP Information Document. The QSP will train any other employee with responsibilities for implementing portions of the SWPPP and its components, including spill cleanup, inspections and sampling procedures and methods.

Personnel at all levels shall be trained in the components and goals of the CGP. Specifically, employees of the Contractor, Trade Contractor or any subcontractors working on the construction site shall be informed of the goals of SWPPP at a training meeting prior to commencing construction activities. The training meeting shall cover basic storm water information as well as the specific requirements of the CGP. Specifically, the meeting will focus on implementation, inspection, and maintenance of storm water BMPs that apply to all construction activities and the work elements to be conducted by the Trade Contractor or Subcontractor and the location and use of spill kits and spill protocols.

Contractors, subcontractors and employees responsible for implementing, inspecting, maintaining, or repairing storm water BMPs will receive copies of relevant portions of the SWPPP. The Contractor shall train all new employees and subcontractors before they will be permitted to work on the site. For projects that start during the dry season, refresher sessions on storm water pollution control will be conducted in the fall prior to the wet season. Personnel responsible for collecting storm water samples will be

trained on the use of field equipment and collection procedures. Additional training will be provided as necessary based on site inspections and evidence of storm water quality problems.

6.0 Construction Site Monitoring Plan

In order to ensure the BMPs described in Section 3 and detailed on the SWPPP maps and drawings are effective and adequate to meet the discharge prohibitions, a Construction Site Monitoring Plan (CSMP) comprised of BMP inspections (visual monitoring) and sampling of discharges is required. This CSMP provides the technical detail and protocols necessary for conducting visual inspections and storm water sampling required by the CGP.

BMPs shall be inspected on a weekly basis and every 24 hours during extended rain events for all projects. Tracking controls (Risk Level 2 and 3 only) shall be inspected daily. Pre-storm baseline inspections shall be done within two business days of each forecasted rain event of qualifying proportion. Pre-storm Rain Event Action Plan (REAP) shall be developed 48 hours prior to any likely precipitation event for all phases of construction. Inspections should be conducted at 24-hour intervals during extended rain events. Post-storm inspections shall be done within two business days after each qualifying rain event. Non-storm water discharge inspections shall be done for each drainage area on a quarterly basis. Example inspection and sampling forms are shown in Appendix C.

Sampling and Analysis

Storm water discharge sampling shall be conducted with a minimum of 3 samples per day during qualifying rain event at discharge locations to characterize the discharges associated with construction activity from the entire project disturbed area. Suspected non-visible pollutant discharge sampling from site shall be conducted within the first two hours. Collect samples of runoff affected by the spilled or released material(s) and uncontaminated runoff from upstream of the spill or release. If needed to justify site specific sediment risk assessment or when discharging to receiving water impaired for sediment or when sediment basins are used, collect samples of run-on and runoff to test for particle size or turbidity.

Visual inspections (observations) of BMPs, to evaluate the presence of non-visible pollutants, and non-storm water discharges and storm water sampling will be conducted to evaluate the adequacy and effectiveness of installed BMPs and meet the specific requirements of the permit. This CSMP will be amended if necessary as risk level requirements or site conditions change. The techniques and methodologies for collection of storm water and analyses of water quality constituents are common and have been standardized by the U.S. Environmental Protection Agency (EPA).

6.1 CSMP Goals and Objectives

The CSMP was developed and will be implemented to address the following objectives:

- demonstrate compliance with applicable discharge prohibitions;
- determine whether non-visible pollutants are present and are causing or contributing to exceedance of water quality objectives;
- determine whether immediate corrective actions, BMP implementation, or SWPPP revisions are necessary; and
- determine whether BMPs included in the SWPPP are effective.

6.2 Discharge Prohibitions

All discharges are prohibited except for the storm water and non storm water discharges specifically authorized:

- All discharges which contain a hazardous substance in excess of reportable quantities established in 40 CFR Section 117.3 and 302.4 unless a separate NPDES permit has been issued to regulate those discharges;
- Discharges prohibited by the North Coast Regional Water Quality Control Basin Plan;
- Discharge of debris from construction sites; and
- Runoff from areas with soil contamination or suspected soil contamination.

The discharge of non-storm water is authorized if the discharge:

- Does not violate a water quality standard;
- Does not violate any other permit provisions;
- The discharger has implemented specific BMPs required to prevent or reduce contact with of the non-storm water discharge with construction material or equipment;
- The discharge does not contain toxic constituents in toxic amounts or other significant quantities of pollutants;
- The discharge is monitored and meets the applicable NALs; and
- The discharger reports the sampling information in the Annual Report.

6.3 Effluent Standards

The effluent standards for Risk Level 2 projects include Narrative effluent standards. Risk level 2 projects also have Numeric Action Levels (NALs); however, a recent court order suspended the use of Numeric Effluent Limits (NELs) and associated monitoring for Risk Level 2 projects.

Narrative Standards

At a minimum, the project is required to comply with the following narrative effluent standards.

1. Storm water discharges and authorized non-storm water discharges shall not contain a hazardous substance equal to or in excess of reportable quantities established in 40 CFR §§ 117.3 and 302.4, unless a separate NPDES Permit has been issued to regulate those discharges; and
2. Minimize or prevent pollutants in storm water discharges and authorized non-storm water discharges through the use of controls, structures, and management practices that achieve BAT for toxic and non-conventional pollutants and BCT for conventional pollutants.

Numeric Action Limitations (NALs)
Risk Level 2 projects are subject to the Numeric Action Levels (NAL) identified below:

1. pH: 6.5 to 8.5 (storm event daily average)
2. Turbidity: 250 NTU (storm event daily average)

The project must maintain a measured pH and turbidity reading on site within the ranges identified above.

NAL Exceedance Site Evaluation
If the NAL for pH and/or turbidity is exceeded, the project must take corrective actions, primarily to reassess whether or not the project's on-site measures are working together as intended to remove or reduce pollutants. A construction site and run-on evaluation shall be conducted to determine whether pollutant sources associated with the site's construction activity may have caused or contributed to the NAL exceedance and shall implement corrective actions if needed.
The site evaluation shall be documented in the SWPPP and specifically address whether the sources of the pollutants causing the exceedance of the NAL are:

1. Related to the construction activities; and/or
2. Related to the run-on associated with the construction site location.

If exceedences are related to construction activity or to the associated run-on, the site must be evaluated to determine whether additional BMPs are require to:

- meet BAT/BCT requirements;
- reduce or prevent pollutants in storm water discharges from causing exeedances of receiving water objectives; and
- determine what corrective actions were taken or will be taken and with a description of the schedule for completion.

If the NAL for pH and/or turbidity is exceeded, the reporting requirements in section 8.2 must be followed.

6.4 Roles and Responsibilities for Storm Water Monitoring

The QSP is required to oversee the implementation of the CSMP including all inspections and any sampling that may be needed due to possible non-visible pollutant discharges or specifically required by the permit. The QSP may delegate any or all of these activities to appropriately trained individuals; however, the QSP will maintain overall responsibility for the monitoring effort (non-storm water and storm water visual observations, sampling and analysis, full compliance with the CGP, and implementation of all elements of the SWPPP). This person shall:

- be responsible for site hazards and safety information related to conducting visual observations or sample collection, particularly in inclement weather;
- conduct the visual inspections or train others to perform the inspections;
- ensure implementation of repairs or design changes to BMPs within 72 hours of identification of failures or shortcomings;
- serve as primary contact with the analytical laboratory regarding sampling issues;
- conduct or oversee sample collection;
- coordinate sample delivery to the analytical laboratory;
- ensure that proper documentation is recorded; and
- ensure that QA/QC procedures are followed.

The QSP or appropriately trained inspectors shall conduct the following tasks:

- weekly visual inspections of all BMPs;
- pre-, daily and post- rain event visual inspections for qualifying rain events;
- quarterly non-storm water discharge visual monitoring inspections; and
- proper documentation of all inspections.

The QSP or appropriately trained sampling team will conduct or be assisted by others in the following tasks:

- preparation of storm water sampling equipment;
- collection of storm water samples in laboratory provided sample bottles;
- determine if non-visible pollutant sampling is required due to a failure to implement or breach of BMPs or a spill;
- performance of field measurements;
- completion of applicable documentation (site logs, checklists, chain-of-custody forms); and
- delivery of samples to the analytical laboratory.

Visual Inspections and Sample Collection Exemptions

The QSP shall be prepared to conduct visual observations (inspections) and sample collection until the minimum CGP requirements are met. The QSP is not required to conduct visual observations (inspections) or sample collection under the following conditions:

- dangerous weather conditions such as electrical storms or flooding; and/or

- outside scheduled business hours.

If no required visual observations (inspections) or sampling is conducted due to these exceptions, the QSP shall include an explanation in the SWPPP and in the Annual Report documenting why the visual observations (inspections) and/or samples were not conducted.

6.5 Site Inspections (Visual Monitoring Observations)

The QSP will ensure that the site is in compliance with the CGP through the use of visual inspection procedures. Visual inspections are required for the duration of the project with the goal of confirming that appropriately selected BMPs have been implemented, are being maintained, and are effective in preventing potential pollutants from coming in contact with storm water.

Copies of the completed checklists shall be kept with the SWPPP. A tracking or follow-up procedure shall follow any inspection that identifies deficiencies in BMPs and required corrective actions. If the required site inspections identify controls that are not operating effectively, maintenance to address corrective actions shall be performed within 72 hours of identifying the deficiency. Written documentation of the inspection shall be maintained for three years.

Inspection Records
All inspections must be documented. Forms that may be used for inspection reporting are included in Appendix C. If alternative forms are used, they must include, at a minimum:

1. name(s) and contact information of the personnel performing the observations;
2. observation time(s) and date(s);
3. weather conditions (including the rain gauge reading for the qualifying rain event);
4. description of locations observed; and
5. corrective actions taken in response to observations.

Completed forms shall be kept in the SWPPP or in a designated binder, which will be kept with the SWPPP onsite. A summary of all inspections and corrective action taken will be compiled and reviewed quarterly and reported in SMARTS. Dischargers shall retain records of all storm water monitoring information and copies of all reports (including Annual Reports) for a period of at least three years.

BMPs Inspections
The CGP requires that BMPs be inspected weekly and prior to a forecast storm, after a rain event that causes runoff from the site, and once each 24-hour period during extended storm events. For Risk Level 2 Projects only, tracking control BMPs must be inspected daily. The purpose of these inspections is to identify BMPs that:

- need maintenance to operate effectively;
- failed and need to be repaired; or
- could fail to operate as intended.

These inspections should also note the presence or indications of any authorized or unauthorized non-storm water discharges, pollutant characteristics and source within each drainage area. If deficiencies are identified during a BMP inspection, corrective actions including maintenance, repairs, and/or design changes to the BMPs and the SWPPP, if applicable, shall be initiated within 72 hours of identification and need to be completed as soon as possible.

Visual Monitoring (Inspection) of Qualifying Rain Events
The site shall be inspected within 48 hours of a forecast storm of 0.5 inches of rain or more, within 48 hours after a rain event that causes 0.5 inches or more of rain and at 24-hour intervals during extended rain events. The results of all inspections and assessments will be documented and copies of the completed inspection checklists will be maintained with the SWPPP.

The project site will install an onsite rain gage that will be used to accurately measure total rain accumulation on the site. The rain gauge will be emptied prior to a forecast rain event and the site reading recorded following the rain event.
Baseline or Pre-storm Inspection

The CGP requires that dischargers only use weather forecasts from the National Oceanographic and Atmospheric Administration (NOAA). Pre-storm inspections shall be initiated after consulting NOAA for qualifying rain events of 50% or greater probability of precipitation. These forecasts can be obtained at http://www.srh.noaa.gov.
Within 2 business days, (48) hours of a qualifying rain event producing precipitation of 0.5 inch or more, a storm water visual monitoring site inspection will include observations of the following locations:

- all storm water drainage areas (identify all discharge points);
- any non-storm water discharges (identify any spills, leaks, or uncontrolled pollutant sources and schedule the appropriate repair or BMP installation and, if necessary, remediation prior to the rain event);
- all BMPs (identify if they have been properly designed and installed, and identify where additional BMPs need to be installed prior to the rain event); and
- all storm water storage and containment areas (identify potential problems and note the available storage volume and schedule maintenance or repair prior to the rain event if necessary).

All inspections (visual observations) will be documented and maintained onsite in the SWPPP.

Rain Event Action Plan (REAP)
Risk Level 2 projects shall develop a REAP 48 hours prior to any likely precipitation event. The REAP shall be prepared by the QSP for each phase of the project. The requirements of the REAP are discussed in Section 4 of this SWPPP.

Daily and post-storm inspections
The daily storm inspection as well as the post-storm inspection shall include:

- all storm water drainage areas (inspect all discharge points);
- all material and waste stockpiles (identify any discharge or damage due to rain);
- all storm water storage and containment areas (identify any leaks and the presence of adequate freeboard; note the presence or absence of floating and suspended materials or a sheen on the surface as well as discolorations, turbidity, odors; note the source(s) of any observed pollutants); and
- all BMPs (identify if they were adequately designed, implemented, and effective, if additional BMPs are required, which changes the erosion control plan, revise the SWPPP accordingly).

Any areas that are identified as a breach in BMPs, leaks, malfunction, or spills will be recorded, tracked, and include follow-up corrective actions. If deficiencies are identified during a BMP inspection, maintenance, repairs, and/or design changes to the BMPs, and the SWPPP if applicable, shall be initiated within 72 hours of identification unless safety factors prevent this from happening, in which case they shall be completed as soon as possible. Safety factors preventing a timely correction of deficiencies shall be documented.

Quarterly Visual Monitoring For Non-Storm water Discharges
A storm water visual monitoring site inspection for non-storm water discharges will be conducted quarterly for each drainage area for the presence of (or indications of prior) unauthorized and authorized non-storm water discharges. A quarterly visual observation shall be conducted once in each of the following periods: January-March, April-June, July- September, and October-December.
Visual Observations are only required during daylight hours (sunrise to sunset).
Results of the quarterly monitoring should be recorded on the Quarterly Non Storm water Observation Sheet using the checklist provided.

Quarterly inspections shall include each drainage area of the project and document:

- The presence or evidence of any non-storm water discharge (authorized or unauthorized) and their sources;
- Pollutant characteristics of the non-storm water discharge (floating and suspended material, sheen, discoloration, turbidity, oder, etc.);
- The person performing the visual observation (inspection);
- The dates and approximate times each drainage area and non storm water discharge was observed; and

- The response taken to eliminate unauthorized non-storm water discharges and to reduce or prevent pollutants from contacting authorized non-storm water discharges.

6.6 Site Sampling

Projects are required to conduct non-visible sampling on site when there is evidence of a breach or failure to implement a BMP or as a result of a spill that is not contained or properly cleaned up. Risk Level 2 projects are also required to monitor storm water discharges for compliance with the NALs. The purpose of the NAL and its associated monitoring is to provide operational information regarding the performance of site BMPs used at the site to minimize the discharge of pollutants. If the NAL is exceeded, additional BMPs must be immediately implemented and the SWPPP should be revised accordingly to either prevent pollutants or authorized non-storm water from contaminating storm water, or to substantially reduce the pollutant levels below NALs. This section identifies the strategy to comply with the sampling requirements for these projects.

Storm water Discharge Monitoring
Risk Level 2 dischargers shall perform sampling and analysis of storm water discharges at all discharge locations to categorize discharges associated with construction activity from the entire project disturbed area. The samples shall be collected from discharge points where storm water discharges off the site and should be representative of the effluent in each drainage area based on visual observations and upstream conditions. Risk Level 2 projects shall collect a minimum of 3 grab samples per day of the qualifying rain event (0.5 inches or more of precipitation). Samples should be collected from all discharge points where storm water discharges offsite.

If there is no discharge off the site, the absence of discharge should be documented. The samples collected of stored or contained storm water should be from discharges subsequent to a qualifying rain event (more than .5 inches of rain.). The site run-on from surrounding areas should be monitored and reported if there is reason to believe run-on may contribute to an excess of NALs. All storm water sampling collection preservation and handling shall be conducted in compliance with the CGP. These protocols are summarized in Section 6.6.4 and 6.6.5.

Monitoring locations may include any pipe, culvert, gutter, channel, stream, sheet flow, or other conveyance that transports storm water runoff from the site. At times, these conveyances will be permanent structures. In other cases, the storm water conveyances may change location due to changes in construction activity. Specific monitoring locations may vary from phase to phase (except for areas of the site where pre-existing contamination is known to exist). Potential monitoring locations should be representative of the project site.

The QSP shall identify sampling locations on the SWPPP maps, as required in the CGP and as outlined in this CSMP. Descriptions shall be included for each of the project's sample collection locations, including identification of locations specific to particular pollutants of concern, BMPs, project phases, and drainage management areas (DMAs). The list will be updated to include actual locations where storm water discharges off the project site that were not identified during the preparation of the SWPPP (i.e. BMP breach locations).

Non-Visible Pollutant Monitoring

Non-visible pollutant monitoring is required on projects of all risk levels in areas with historical contamination, soil amendments have been applied, and when there is a suspected non-visible pollutant in the storm water due to a spill, breach in the BMPs or the failure to implement a BMP to prevent storm water contamination.

Based on the anticipated pollutants, the Construction Site Constituents form located in the SWPPP will be utilized to identify the appropriate parameter to be monitored and the appropriate analytical test method. The project strategy for field collection and analysis for each potential pollutant is summarized in the table.

Trained field personnel will be responsible for performing the field tests and collecting samples for analysis in the laboratory. Laboratory samples will be analyzed by the laboratory in accordance with established EPA Test Methods.

If analyses of the samples indicate that non-visible pollutants are being discharged from the site, notify the RWQCB. If the analyses of the samples indicated the NAL for pH has been exceeded, follow the site evaluation procedures in Section 6.8 and the reporting procedures in Section 8.2.

Non Visible Pollutant Sampling locations

In order to be able to compare the Non Visible pollutant sample collected with an uncontaminated sample, it is necessary to collect two samples. The potentially contaminated sample should be collected at a point downstream of the areas where soil amendments have been applied or historic contamination is located or the location where a spill or BMP breach occurs. It is not possible to know where a spill or BMP breach location will occur but often these are related to demolition debris stockpiles, concrete washout stations or material or waste storage areas. Potential sampling locations down gradient of these locations or where storm water will leave the project site or enter a storm drain conveyance system should be identified.

The uncontaminated sample location should be either up gradient or otherwise away from the area when the contaminated sample is collected. If feasible, the location for collection of the uncontaminated sample should be in the same phase of development as the sample potentially containing a non-visible pollutant. For example, if the sampling event takes place in an area where mass grading is occurring, the uncontaminated

sample should, likewise, be collected in an area were mass grading is occurring, as opposed to an area where build-out is nearly complete. Potential sampling locations are summarized below and identified in the SWPPP.

Determining the Need to Monitor due to Breach, Malfunction, Leakage or Spill
Non-visible pollutant monitoring in areas not historically contaminated and without soil amendments will be conducted when there is a suspected non-visible pollutant in the storm water due to a spill, breach in the BMPs or the failure to implement a BMP to prevent storm water contamination. The storm water will be sampled for the anticipated contaminants expected to be found in the storm water due to the breach, spill or historical contamination. The evaluation of the need to conduct non-visible pollutant monitoring shall proceed according to the following steps.

Step (1): Is there a non-visible pollutant present that may be discharged from the site in storm water runoff? If yes, then proceed to Step 2.

Step (2): Is the non-visible pollutant stored onsite in such a way that storm water may come in contact with it (e.g., in a non-watertight container, stored outside without cover)? If yes, then proceed to Step 3.

Step (3): Does routine weekly, pre-rain, during-rain, or post-rain visual monitoring reveal that there has been or there is currently occurring a spill or leak, or a breach or malfunction of a BMP that could result in the discharge of a non-visible pollutant in storm water from the site? If yes, then proceed to Step 4.

Step (4): After containing the spill, leak, breach, or malfunction, do you still suspect that there is currently, has been, or could be traces of a non-visible pollutant? If yes, then proceed to Step 5.

Step (5): Conduct non-visible pollutant monitoring according to the sampling strategy, Table 18, (e.g., call lab or take field samples for pH or turbidity)
Non-Visible Pollutant Sampling Requirements
If non-visible pollutant sampling is required, the following requirements shall be met for timing of sample collection, size of samples and background sampling:
Collect samples. Samples should be collected within the first two hours of discharge from rain events that occur during daylight hours and which generate runoff. Sampling is required 7 days per week, including weekends and holidays at discharge locations that can be safely assessed.

1. Ensure samples are large enough to characterize the site conditions; and
2. Collect and uncontaminated sample at up gradient locations for comparison with the discharge sample.

Analyze the sample. Use the analytical methods identified in Table 18.
Prepare documentation. Prepare a pollutant monitoring report for each sampling event. Keep analytical data, including chain-of-custody forms, with the SWPPP.

If analyses of the samples indicate that non-visible pollutants are being discharged from the site, notify the RWQCB. In addition to any reporting obligation, take the following steps as soon as possible.

Personnel trained in the collection of field or laboratory samples shall collect the contaminated and uncontaminated samples for all non-visible pollutant monitoring. Appropriate personnel shall be available to collect samples on regular working days, as well as on weekends and holidays, should the need arise. Personnel will be trained in sample collection methods, operation of field analysis devices or laboratory collection and transport protocols, and appropriate indicator parameters to be analyzed for the non-visible pollutants sampled.

If the samples are monitored for pH and the results exceed the NAL, conduct a site evaluation as described in Section 6.3.2.1.

Monitoring Preparation and Equipment
If the sampling will be conducted by a certified laboratory, provide the following information:
Name of the Lab:_____
Phone:_____
Email:_____

If the sampling conducted onsite will be performed by the QSP and/or other trained employees onsite, then refer to the remainder of this section for procedures and protocols. If the sampling is conducted by a contracted sample collection service and/or laboratory, then the certifications shall be contained in the SWPPP.

Pre-storm sampling event procedures include tracking weather forecasts, evaluating storm sampling criteria, and preparing sampling equipment before each storm event. The following storm sampling criteria have been established to determine which storms will be sampled for water quality constituents:

1. The storm event produces runoff at the site from the areas to be sampled; AND
2. There may be pollutants in the runoff that are not visually detectable due to:
    a. runoff contacting and discharging from an area of historic contamination; OR
    b. runoff contacting and discharging from surfaces to which soil amendments have been applied; OR
3. runoff contacting and discharging from surfaces to which pollutants have leaked or spilled during construction; OR
4. runoff contacting and discharging from stored materials, stockpiles, or waste.

In each instance, runoff is to be sampled both upstream and downstream of the area triggering the requirement to sample.

Weather Tracking
The QSP or designee will track weather forecasts on a daily basis. The daily tracking includes review of publicly available data (e.g., the National Weather Service, The Weather Channel, Internet weather sites). When data from these various sources indicates that a storm event is imminent, staff will be on "stand-by alert" in the event that storm water sampling is required. Field sampling teams will be prepared to mobilize to collect samples, if required, during the first two hours of runoff.

Sample Bottle Ordering
Storm water sample collection bottles will be ordered from the analytical laboratory. The laboratory will provide the correct type and size of bottles required for the particular analysis being conducted. In addition, the laboratory will add preservative to the sample bottles, if required. A sufficient amount of bottles must be ordered to collect both environmental and quality control composite samples and to ensure that a shortage of bottles does not occur. The analytical laboratory will provide blank water for the collection of required field blank samples.

Sample Bottle Labeling
Storm water collection bottles will be pre-labeled prior to each sampling event. Labels will include the site name, collection date and time, sample location, names of the field sampling team, event sample number and bottle number (if more than one). Only the collection date and time, sample location and number, and sampling personnel names will need to be filled out at the time of collection. All other information can be filled out in a dry environment prior to collection. Information will be written with a permanent quick-drying ink marker that is water- and fade-resistant on a water resistant label prior to transport to the laboratory.

Water Quality Sampling Equipment
Storm water samples at the site will be collected as manual grab samples. Sample collection equipment may vary, depending on the specific monitoring location and configuration. Sample collection bottles and lids will be cleaned prior to sample collection by the laboratory.
Examples of typical equipment include:

- polypropylene scoops, jars, or flat trowels;
- polypropylene buckets;
- polypropylene containers attached to an extendable pole;
- polypropylene funnels;
- gloves (always wear during sample collection);
- cooler filled with ice (to keep samples cold);
- distilled water (for rinsing sampling equipment); and
- towels and paper towels.

Field Equipment Preparation
If the updated forecast shows that the potential storm event will satisfy the selection criteria within the next 12 hours, field sampling personnel will set up the grab sampling equipment, bottles, and coolers. The procedures for field equipment preparation are as follows:

1. Determine where samples may need to be collected;
2. Obtain proper sample bottles;
3. Set up prepared coolers containing ice and labeled sample bottles;
4. Set up grab sampling gear and field support equipment; and
5. Place equipment supplies in a convenient location to be mobilized from.

Sample Collection, Preservation and Delivery
This section describes the procedures involved in the collection, preservation, and delivery of water quality samples to the analytical laboratory. Information describing sample representativeness and the analytical prioritization of the individual water quality analyses are also included.

Sample Collection Methods
If possible, field sampling teams will consist of two persons. Because of the unpredictability of storm events, and the requirement to sample within the first two hours of runoff, field crews must arrive at the monitoring sites before any significant storm water runoff has been observed.

Grab samples will be collected for monitoring for non-visible pollutants. Provided there is adequate runoff available, the grab samples will be collected upstream and downstream of the area requiring monitoring.

Detailed Grab Sample Collection Procedures for Each Monitoring Site
Inspect general conditions of the site. Note the conditions of the site at the time of sampling. Once runoff is observed in the area to be sampled (sheet flow, drainpipe, or other storm water conveyance), manually collect a water sample with the appropriate collection device. Once sufficient water has been collected in the collection device, carefully pour the water into each of the laboratory sample bottles using a funnel. Collection devices shall be cleaned before collecting each sample. Clean equipment with a 2% Contrad detergent solution, rinse off the collection device and funnels with distilled water and towel dry to prepare for the next sampling location or event.

Field Measurement Methods
Certain grab samples will require field measurement of certain parameters. To accomplish this, pour a subsample of storm water into a clean plastic cup for field measurements. pH and electrical conductivity can be measured using hand-held devices. The devices should be calibrated prior to mobilization at the monitoring site using the manufacturer's calibration procedures. At some locations, colorimetric field test kits (e.g., HACH field kits) may be used to test for the presence of chlorine or

detergents. Follow manufacturers' instructions on proper use of the test kits. The measurements will be recorded in field notes and on the chain-of-custody forms. The subsample will then be discarded following recording of the field measurements.

Sample Containers and Handling

Sampling procedures involving handling items that have direct contact with the samples (i.e., sampling container, container lid, etc.) will be performed in accordance with proper sample handling techniques designed to minimize contamination of the sample. In summary, sampling personnel are required to wear clean powder-free nitrile gloves. One member of the field team will not come into contact with any other items and will change gloves between sample collections or when the gloves have come in contact with any potential source of contamination. The other field team member will be responsible for cleaning of sampling equipment and all other activities that do not involve handling items that have direct contact with the sample.

Clean Sample Collection Methods

To maintain sample integrity, the following procedure will be followed during collection of a storm water grab sample:

Wearing clean powder free nitrile gloves, one member of the field team will collect the samples with the polypropylene scoop and the collection funnels. The second team member will organize the appropriate sample bottles and will label the collected samples. Once the entire sample volume has been collected, the first team member will pour an additional subsample as required into a cup and take the field measurements while the second member records the data.

Forms and Procedures for Documenting Sample Collection and Field Measurements

The following forms are to be completed during each storm event monitored at each site:

1. Non-Visible Pollutant Monitoring Report; and
2. Chain-of-custody form (duplicate copies will be retained by the laboratory).

Laboratory Communication Procedures

Staff will contact the analytical laboratory 24 hours before the anticipated beginning of the storm event. The laboratory will be instructed to prepare sample bottles for use at the monitoring sites and to prepare for receipt of samples during and following the storm event.

Sample Shipping/Delivery and Chain-of-Custody

After grab samples are collected, the field sampling team is responsible for delivery of grab samples to the analytical laboratory as soon as possible to meet sample holding time requirements. If samples are to be analyzed for bacteria, they must be delivered to the laboratory within six hours of sample collection. Samples for all other analyses should be delivered within 24 hours of collection. The laboratory should be notified of

estimated time of delivery and be alerted when weekend delivery is required. The following list outlines the packaging and shipping procedures for pick-up.
Assemble and package sample bottles in an orderly and secure manner for delivery to the laboratory. Verify information on the chain-of-custody form completed by the field sampling team on a cooler-by-cooler basis. If multiple coolers contain bottles from the same sampling location, indicate this on all related forms. If necessary, re-pack coolers with ice to keep samples cool and to prevent breakage. Place the completed chain-of-custody form in a bag and place the form in the cooler with the bottles. Pack any sampler bottles to be cleaned for delivery to the analytical laboratory.

Sample Preservation and Filtration
During collection of grab samples, the field teams will seal sample bottles in Ziploc bags, place them in a cooler, and pack the cooler with ice to preserve the samples to approximately 4 degrees Celsius. Once samples are at the laboratory, they will be refrigerated until analysis.

Sample filtration and/or preservative may be required for some analyses, including dissolved metals. Because of contamination concerns, this will be performed in the laboratory in accordance with procedures specified by the appropriate analytical method.

7.0 Corrective Actions

Based on inspections and monitoring conducted onsite during construction, corrective actions may need to be taken to improve BMP implementation and/or prevent or reduce pollutants in storm water discharges and authorized non-storm water discharges from the project site. Maintenance or repairs to existing BMPs, adding additional or different BMPs and altering construction operations are some corrective actions that may be required. Corrective action requirements for the project are as follows:

1. Take corrective actions when spills, leaks or uncontrolled pollutant sources are identified in a storm water drainage area during visual inspections;
2. Take corrective actions when BMPs are identified, during visual inspections, as not being properly implemented in accordance with the SWPPP or deficient in controlling pollutants in storm water;
3. Take corrective actions when effluent samples exceed the NAL (Risk Level 2);
4. Records of any corrective actions and follow-up activities that resulted from analytical results, visual observations or inspections; and
5. A summary of all corrective actions taken during the compliance year, as well as identification of any corrective actions that were not implemented, are required to be included in the Annual Report.

The completion of the corrective action shall be annotated on the inspection report that identified the need for the action. Incomplete corrective actions will be tracked on

successive reports. Quarterly, the corrective action shall be summarized, including the corrective actions not yet completed, to facilitate preparation of the annual report. The Quarterly summary will be forwarded to the SMARTS and filed in the SWPPP.

8.0 Reporting

The CGP contains mandatory reporting requirements related to the submission of an Annual Report and exceedance reporting for NALs (Risk Level 2). The sections below describe the reporting requirements for each type of report and the timeframes for their submission.

8.1 Annual Report

An Annual Report is required by the CGP for any project with permit coverage of more than one continuous three-month period. The Annual Report summarizes the documentation required to meet the permit requirements. The report must be prepared, certified, and electronically submitted by the LRP or Approved Signatory no later than September 1 of each year using SMARTS. The electronic format for the Annual Report is still under development in SMARTS. The information contained in the annual report is a summary of inspection and monitoring results, corrective actions and training conducted throughout the year and maintained in the SWPPP. The Annual Report must include the following items:

a summary and evaluation of all sampling and analysis results;
copies of the laboratory reports;
the analytical methods, method reporting units, and method detection limits of each analytical parameter;
chain of custody forms;
a summary of all corrective actions taken during the compliance year (compiled quarterly);
identification of any compliance activities or corrective actions that were not implemented;
a summary of all violations of the CGP;
the names of individuals who performed the facility inspections, sampling, visual observations (inspections), and/or measurements;
the date, place, time of facility inspections, sampling, visual observations (inspections), and/or measurements, including precipitation (rain gauge) compiled);
the visual observation and sample collection exception records and reports identified in Attachments C and D of the CGP;
documentation of all training for persons responsible for implementing the requirements of the CGP;
documentation of all training for individuals responsible for BMP installation, inspection, maintenance, and repair; and

documentation of all training for individuals responsible for overseeing, revising, and amending the SWPPP.

An electronic or paper copy of each Annual Report for the project shall be retained for a minimum of three years after the date the Annual Report is filed.

8.2 NAL Exceedance

When an NAL exceedance occurs as a result of a sample taken on a Risk Level 2 site the project must electronically submit all storm event sampling results to the SWRCB and the RWQCB, via SMARTS, no later than 10 days after the conclusion of the storm event. The RWQCB has the authority to require submittal of an NAL Exceedance Report. The NAL Exceedance Report shall contain:

1. The analytical methods, method reporting units, and method detection limits of each analytical parameter;
2. the date, place, and time of sampling;
3. any visual observation (inspections);
4. any measurements, including precipitation; and
5. a description of the current BMPs associated with the effluent sample that exceeded the NAL and any proposed corrective actions taken.

The Contractor shall make every effort to provide the preliminary sampling results to the RWQCB as soon as it is suspected that sample results indicate an NAL has been exceeded. The Report of Discharge Form, laboratory results or field forms should be forwarded to the RWQCB with the description of the BMP associated with the effluent sample and any proposed corrective action(s) to be taken or taken.

8.3 Report of Discharge

When storm water or non-storm water discharges off the project site or into a storm drain inlet or other storm water conveyance system, the RWQCB requires that a Report of Discharge be submitted. The purpose of this report is to allow the RWQCB to evaluate the discharge in order under the CGP. The Report of Discharge Form, shown in Appendix C, should be used to provide additional information about the circumstances related to the discharge and the discharge characteristics to evaluate the source, of the discharge and whether any water quality standards have been exceeded.

Appendix A:

SWPPP Information Document Maps

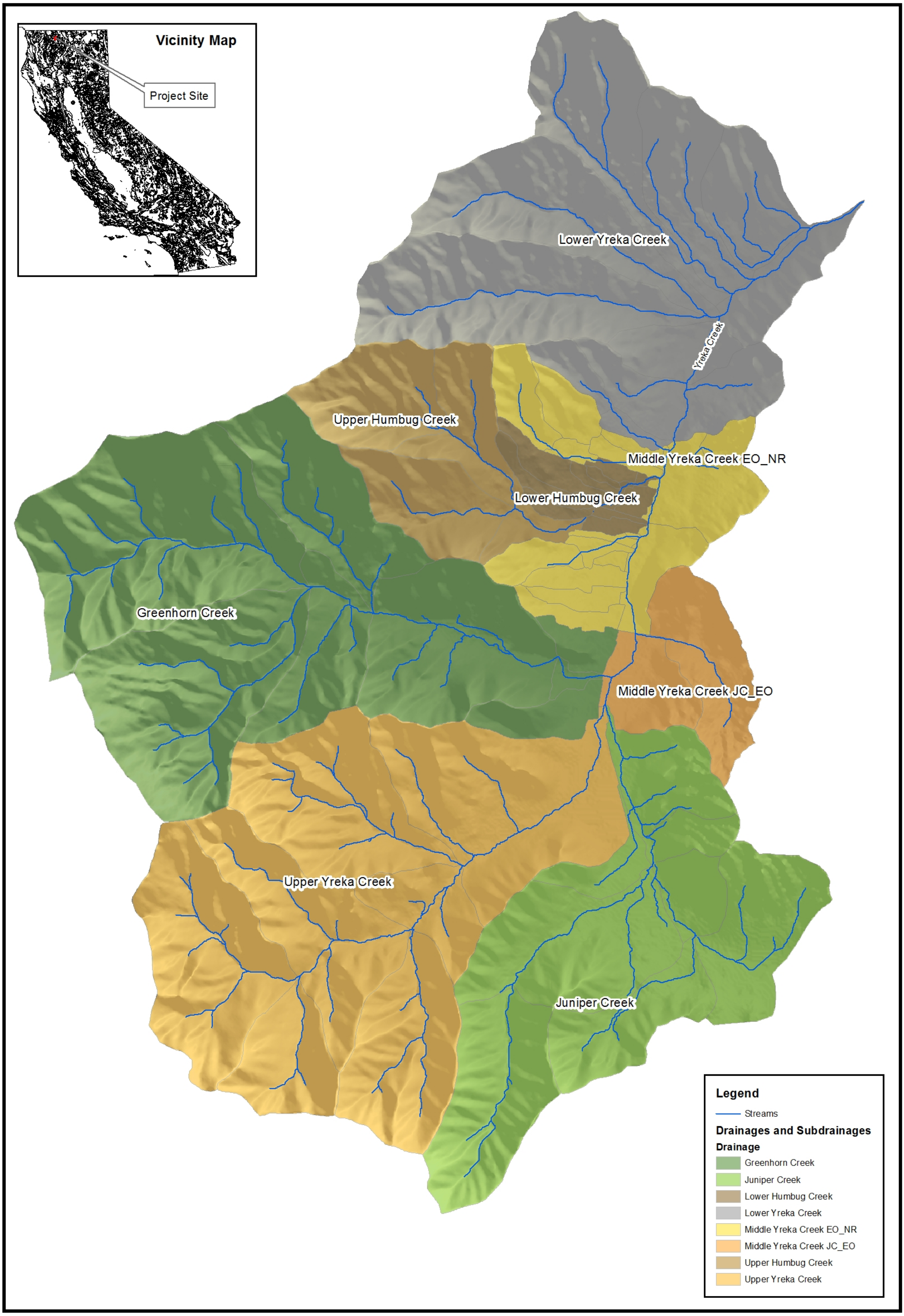

Prepared By:

GeoServ Engineering Geologists Rock - Soil - Water

Project: SWPPP Information Document for Yreka Creek Greenway Floodplain Construction Projects, City of Yreka
Location: Siskiyou County, CA
Figure 1: Construction SWPPP Hydrography Map.

0 0.5 1 2 Miles

Coordinate System: NAD 1983 StatePlane California I FIPS 0401 Feet
Projection: Lambert Conformal Conic
Datum: North American 1983

Date: 1/17/2016

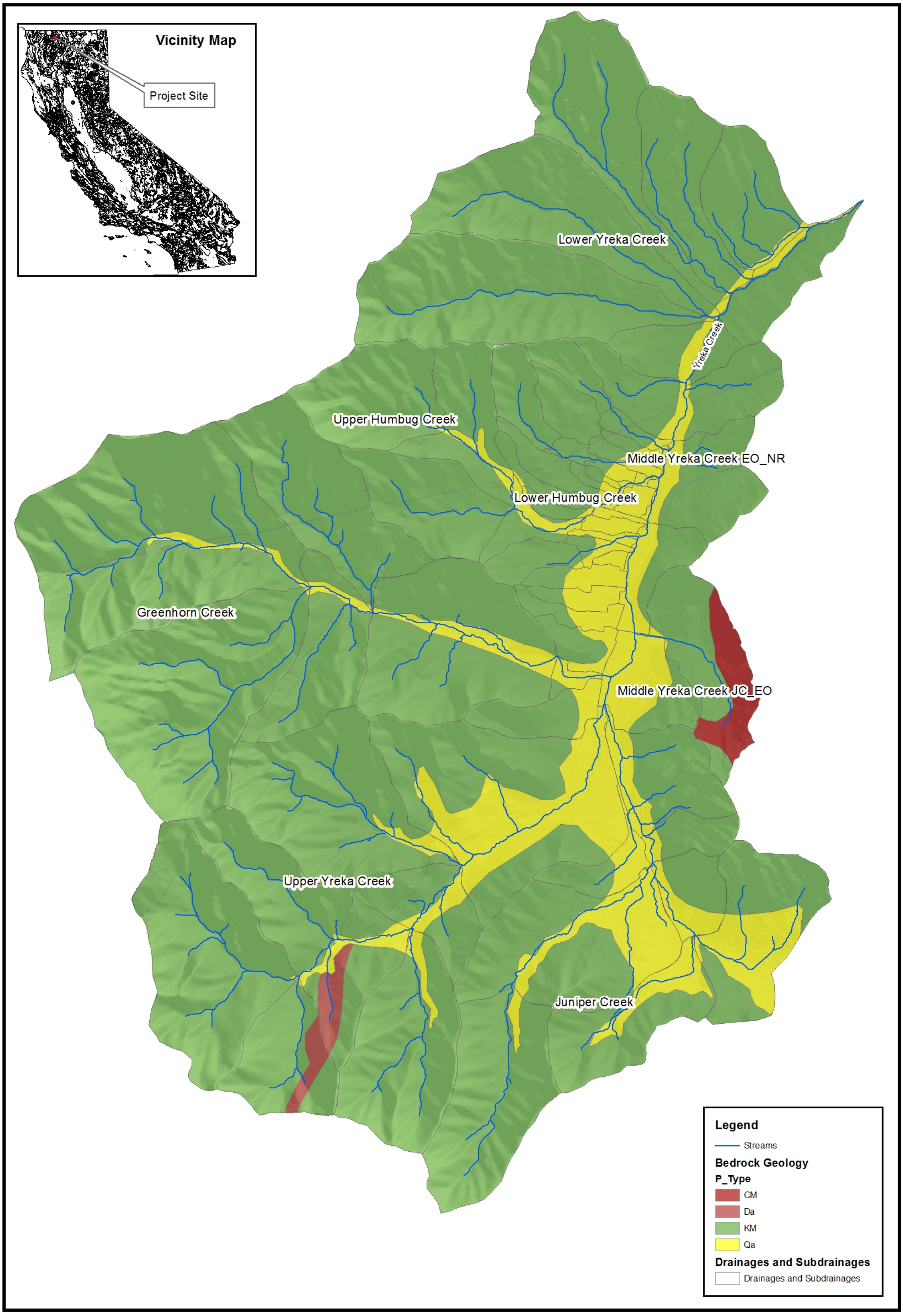

Prepared By:

GeoServ Engineering Geologists Rock - Soil - Water

Project: SWPPP Information Document for Yreka Creek Greenway Floodplain Construction Projects, City of Yreka
Location: Siskiyou County, CA
Figure 2: Construction SWPPP Bedrock Geology Map.

0 0.5 1 2 Miles

Coordinate System: NAD 1983 StatePlane California I FIPS 0401 Feet
Projection: Lambert Conformal Conic
Datum: North American 1983

Date: 1/17/2016

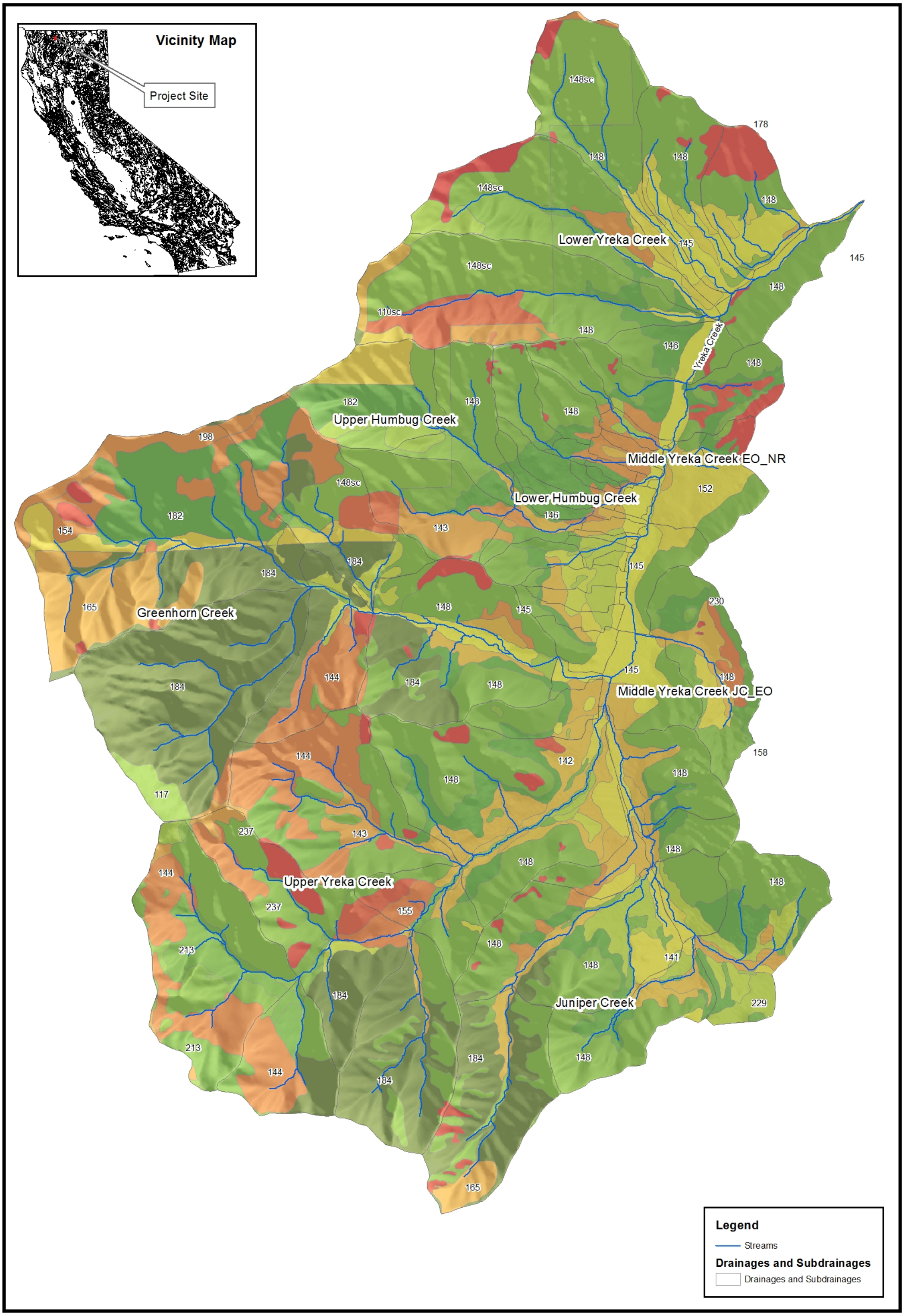

Prepared By:

GeoServ Engineering Geologists Rock - Soil - Water

Project: SWPPP Information Document for Yreka Creek Greenway Floodplain Construction Projects, City of Yreka
Location: Siskiyou County, CA
Figure 3: Construction SWPPP Soils Map.

0 0.5 1 2 Miles

Coordinate System: NAD 1983 StatePlane California I FIPS 0401 Feet
Projection: Lambert Conformal Conic
Datum: North American 1983

Date: 1/17/2016

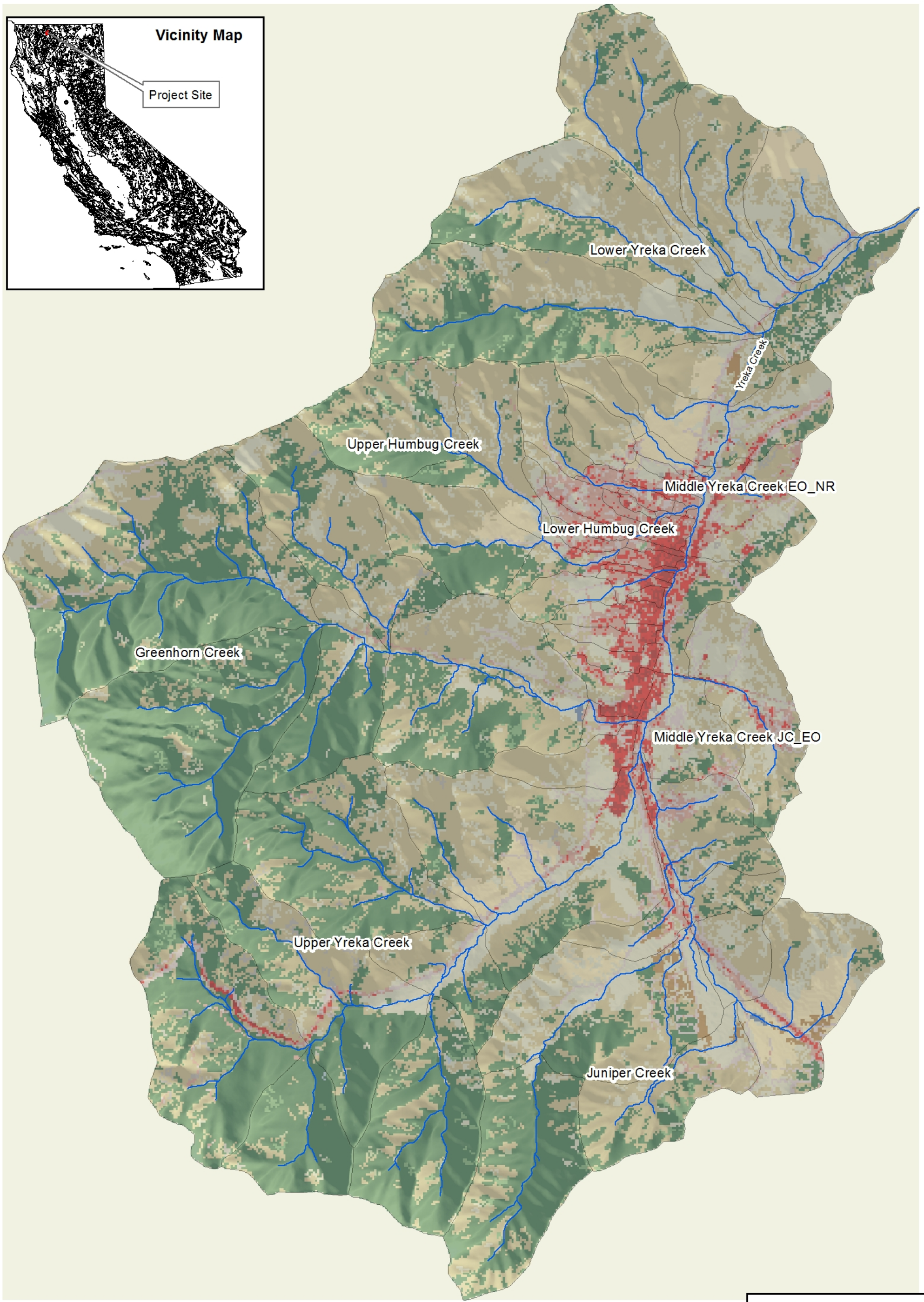

Legend

Streams

Drainages and Subdrainages

Drainages and Subdrainages

Prepared By:

GeoServ
Engineering Geologists
Rock - Soil - Water

Project: SWPPP Information Document for Yreka Creek Greenway Floodplain Construction Projects, City of Yreka
Location: Siskiyou County, CA
Figure 4: Construction SWPPP Land Cover Map.

0 0.5 1 2 Miles

Coordinate System: NAD 1983 StatePlane California I FIPS 0401 Feet
Projection: Lambert Conformal Conic
Datum: North American 1983

Date: 1/17/2016

Appendix B:

BMP Checklists and Typical Drawings

TEMPORARY SOIL STABILIZATION BMPs

CONSTRUCTION BMP ID NO	BMP NAME	CONTRACT MINIMUM REQUIREMENT	CONTRACT BID ITEM	BMP USED		IF CONTRACT MINIMUM REQUIREMENT BUT NOT USED, STATE REASON
				YES	NO	
EC-1	Scheduling					
EC-2	Preservation of Property/Preservation of Existing Vegetation					
EC-3	Temporary Hydraulic Mulch (Bonded Stabilized Fiber Matrix)					
	Temporary Hydraulic Mulch (Polymer Stabilized Fiber Matrix)					
EC-4	Temporary Erosion Control (With Temporary Seeding)					
EC-5	Temporary Soil Stabilizer					
EC-6	Temporary Erosion Control (Straw Mulch with Stabilizing Emulsion)					
EC-7	Temporary Erosion Control Blanket (On Slope)					
	Temporary Erosion Control Blanket (In Swale or Ditch)					
EC-8	Temporary Mulch (Wood)					
EC-9	Earth Dikes/Drainage Swales & Lined Swales					
EC-10	Outlet Protection/Velocity DiECipation Devices					
EC-11	Slope Drains					
EC-12	Streambank Stabilization					
ALTERNATIVE TEMPORARY SOIL STABILIZATION BMPs USED Yes No			IF USED, STATE REASON			
CONSTRUCTION BMP ID NO	**BMP NAME**					
CY-1	Topographic Shaping					Disturbed soil areas are shaped to drain away from discharge points
CY-2	Low-volume Roads/Trails					
CY-3	Road Decommissioning					
CY-4	Spoils Disposal					Assumes that the spoil material is free of potentially toxic pollutants

Notes:

TEMPORARY SEDIMENT CONTROL BMPs

CONSTRUCTION BMP ID NO	BMP NAME	CONTRACT MINIMUM REQUIREMENT	CONTRACT BID ITEM	BMP USED		IF CONTRACT MINIMUM REQUIREMENT BUT NOT USED, STATE REASON
				YES	NO	
SE-1	Temporary Silt Fence					This should only be used outside of the ordinary high water mark
SE-2	Temporary Sediment Basin					This BMP can be convereted to a bioswale or wetland after contruction
SE-3	Temporary Sediment Trap					
SE-4	Temporary Check Dam					
SE-5	Temporary Fiber Rolls					
SE-6	Temporary Gravel Bag Berm					
SE-7	Street Sweeping					
SE-8	Temporary Sand Bag Barrier					
SE-9	Temporary Straw Bale Barrier					
SE-10	Temporary Drain Inlet Protection					
ALTERNATIVE TEMPORARY SEDIMENT CONTROL BMPs USED Yes No			IF USED, STATE REASON			
CONSTRUCTION BMP ID NO	**BMP NAME**					
CY-1	Topographic Shaping					Disturbed soil areas are shaped to drain away from discharge points
CY-2	Low-volume Roads/Trails					
CY-3	Road Decommissioning					
CY-4	Spoils Disposal					Assumes that the spoil material is free of potentially toxic pollutants

Notes:

TEMPORARY TRACKING CONTROL BMPs

CONSTRUCTION BMP ID NO	BMP NAME	CONTRACT MINIMUM REQUIREMENT	CONTRACT BID ITEM	BMP USED		IF CONTRACT MINIMUM REQUIREMENT BUT NOT USED, STATE REASON
				YES	NO	
SE-7	Street Sweeping					
TC-1	Temporary Construction Entrance					
TC-2	Stabilization Construction Roadway					
TC-3	Temporary Entrance/Outlet Tire Wash					
ALTERNATIVE TEMPORARY TRACKING CONTROL BMPs USED Yes No			IF USED, STATE REASON			
CONSTRUCTION BMP ID NO	**BMP NAME**					

Notes:

CONSTRUCTION SITE MANAGEMENT NON-STORMWATER POLLUTION CONTROL BMPs

CONSTRUCTION BMP ID NO	BMP NAME	CONTRACT MINIMUM REQUIREMENT	CONTRACT BID ITEM	BMP USED		IF CONTRACT MINIMUM REQUIREMENT BUT NOT USED, STATE REASON
				YES	NO	
NS-1	Water Control and Conservation					
NS-2	Dewatering Opertations					
NS-3	Paving and Grinding Operations					
NS-4	Temporary Stream Crossing					
NS-5	Clear Water Diversion					
NS-6	Illegal Connection and Illegal Discharge Detection Reporting					
NS-7	Potable Water/Irrigation					
NS-8	Vehicle and Equipment Cleaning					
NS-9	Vehicle and Equipment Fueling					
NS-10	Vehicle and Equipment Maintenance					
NS-11	Pipe Driving Operations					
NS-12	Concrete Curing					
NS-13	Material and Equipment Over Water					
NS-14	Concrete Finishing					
NS-15	Structure Demolition/Removal Over or Adjacent to Water					
ALTERNATIVE NON-STORMWATER CONTROL BMPs USED Yes No			IF USED, STATE REASON			
CONSTRUCTION BMP ID NO	**BMP NAME**					

Notes:

CONSTRUCTION SITE MANAGEMENT WASTE MANAGEMENT AND MATERIALS POLLUTION CONTROL BMPs

CONSTRUCTION BMP ID NO	BMP NAME	CONTRACT MINIMUM REQUIREMENT	CONTRACT BID ITEM	BMP USED YES	BMP USED NO	IF CONTRACT MINIMUM REQUIREMENT BUT NOT USED, STATE REASON
WM-1	Material Delivery and Storage					
WM-2	Material Use					
WM-3	Stockpile Management					
WM-4	Spill Prevention and Control					
WM-5	Solid Waste Management					
WM-6	Hazardous Waste Management					
WM-7	Contaminated Soil Management					
WM-8	Concrete Waste Management					
	Temporary Concrete Washout Facility					
	Temporary Concrete Washout (Portable)					
WM-9	WM-9: Sanitary/Septic Waste Management					
WM-10	WM-10: Liquid Waste Management					
ALTERNATIVE WASTE MANAGEMENT AND MATERIALS POLLUTION CONTROL BMPs USED						IF USED, STATE REASON
	Yes	No				
CONSTRUCTION BMP ID NO	**BMP NAME**					

Notes:

Scheduling EC-1

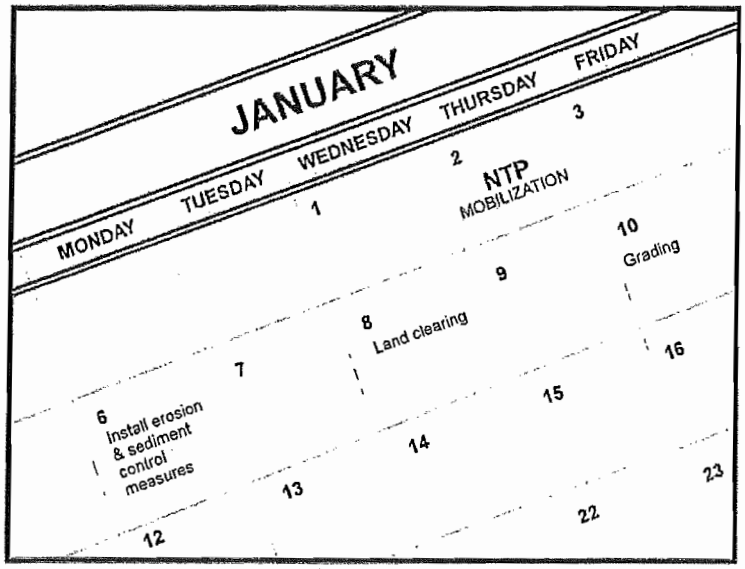

Categories

EC	Erosion Control	☑
SE	Sediment Control	☒
TC	Tracking Control	☒
WE	Wind Erosion Control	☒
NS	Non-Stormwater Management Control	
WM	Waste Management and Materials Pollution Control	

Legend:

☑ **Primary Objective**

☒ **Secondary Objective**

Targeted Constituents

Sediment	☑
Nutrients	
Trash	
Metals	
Bacteria	
Oil and Grease	
Organics	

Potential Alternatives

None

Description and Purpose

Scheduling is the development of a written plan that includes sequencing of construction activities and the implementation of BMPs such as erosion control and sediment control while taking local climate (rainfall, wind, etc.) into consideration. The purpose is to reduce the amount and duration of soil exposed to erosion by wind, rain, runoff, and vehicle tracking, and to perform the construction activities and control practices in accordance with the planned schedule.

Suitable Applications

Proper sequencing of construction activities to reduce erosion potential should be incorporated into the schedule of every construction project especially during rainy season. Use of other, more costly yet less effective, erosion and sediment control BMPs may often be reduced through proper construction sequencing.

Limitations

- Environmental constraints such as nesting season prohibitions reduce the full capabilities of this BMP.

Implementation

- Avoid rainy periods. Schedule major grading operations during dry months when practical. Allow enough time before rainfall begins to stabilize the soil with vegetation or physical means or to install sediment trapping devices.
- Plan the project and develop a schedule showing each phase

CASQA
CALIFORNIA STORMWATER

of construction. Clearly show how the rainy season relates to soil disturbing and re-stabilization activities. Incorporate the construction schedule into the SWPPP.

- Include on the schedule, details on the rainy season implementation and deployment of:
  - Erosion control BMPs
  - Sediment control BMPs
  - Tracking control BMPs
  - Wind erosion control BMPs
  - Non-stormwater BMPs
  - Waste management and materials pollution control BMPs
- Include dates for activities that may require non-stormwater discharges such as dewatering, sawcutting, grinding, drilling, boring, crushing, blasting, painting, hydro-demolition, mortar mixing, pavement cleaning, etc.
- Work out the sequencing and timetable for the start and completion of each item such as site clearing and grubbing, grading, excavation, paving, foundation pouring utilities installation, etc., to minimize the active construction area during the rainy season.
  - Sequence trenching activities so that most open portions are closed before new trenching begins.
  - Incorporate staged seeding and re-vegetation of graded slopes as work progresses.
  - Schedule establishment of permanent vegetation during appropriate planting time for specified vegetation.
- Non-active areas should be stabilized as soon as practical after the cessation of soil disturbing activities or one day prior to the onset of precipitation.
- Monitor the weather forecast for rainfall.
- When rainfall is predicted, adjust the construction schedule to allow the implementation of soil stabilization and sediment treatment controls on all disturbed areas prior to the onset of rain.
- Be prepared year round to deploy erosion control and sediment control BMPs. Erosion may be caused during dry seasons by un-seasonal rainfall, wind, and vehicle tracking. Keep the site stabilized year round, and retain and maintain rainy season sediment trapping devices in operational condition.
- Apply permanent erosion control to areas deemed substantially complete during the project's defined seeding window.

Costs

Construction scheduling to reduce erosion may increase other construction costs due to reduced economies of scale in performing site grading. The cost effectiveness of scheduling techniques should be compared with the other less effective erosion and sedimentation controls to achieve a cost effective balance.

Inspection and Maintenance

- Verify that work is progressing in accordance with the schedule. If progress deviates, take corrective actions.
- Amend the schedule when changes are warranted.
- Amend the schedule prior to the rainy season to show updated information on the deployment and implementation of construction site BMPs.

References

Stormwater Quality Handbooks Construction Site Best Management Practices (BMPs) Manual, State of California Department of Transportation (Caltrans), November 2000.

Stormwater Management for Construction Activities Developing Pollution Prevention Plans and Best Management Practices (EPA 832-R-92-005), U.S. Environmental Protection Agency, Office of Water, September 1992.

Preservation Of Existing Vegetation EC-2

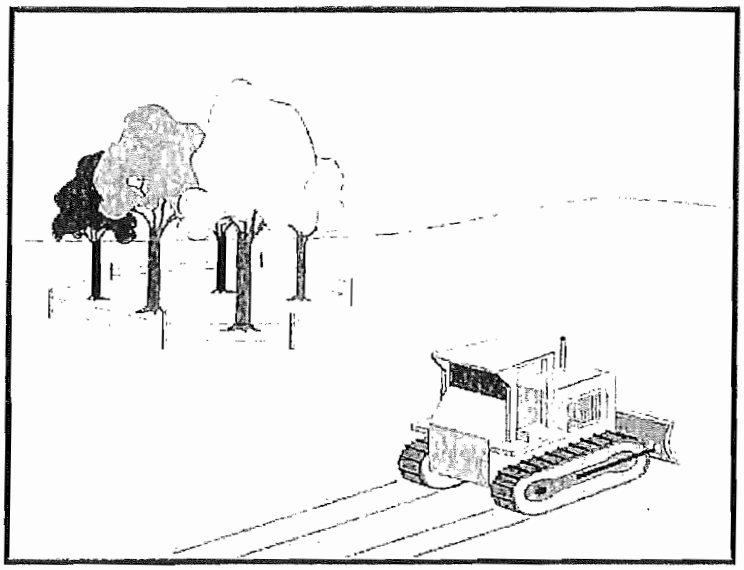

Categories

EC	Erosion Control	☑
SE	Sediment Control	
TC	Tracking Control	
WE	Wind Erosion Control	
NS	Non-Stormwater Management Control	
WM	Waste Management and Materials Pollution Control	

Legend:

☑ **Primary Objective**

☒ **Secondary Objective**

Targeted Constituents

Sediment	☑
Nutrients	
Trash	
Metals	
Bacteria	
Oil and Grease	
Organics	

Potential Alternatives

None

Description and Purpose

Carefully planned preservation of existing vegetation minimizes the potential of removing or injuring existing trees, vines, shrubs, and grasses that protect soil from erosion.

Suitable Applications

Preservation of existing vegetation is suitable for use on most projects. Large project sites often provide the greatest opportunity for use of this BMP. Suitable applications include the following:

- Areas within the site where no construction activity occurs, or occurs at a later date. This BMP is especially suitable to multi year projects where grading can be phased.
- Areas where natural vegetation exists and is designated for preservation. Such areas often include steep slopes, watercourse, and building sites in wooded areas.
- Areas where local, state, and federal government require preservation, such as vernal pools, wetlands, marshes, certain oak trees, etc. These areas are usually designated on the plans, or in the specifications, permits, or environmental documents.
- Where vegetation designated for ultimate removal can be temporarily preserved and be utilized for erosion control and sediment control.

Limitations

- Requires forward planning by the owner/developer,

contractor, and design staff.

- Limited opportunities for use when project plans do not incorporate existing vegetation into the site design.
- For sites with diverse topography, it is often difficult and expensive to save existing trees while grading the site satisfactory for the planned development.

Implementation

The best way to prevent erosion is to not disturb the land. In order to reduce the impacts of new development and redevelopment, projects may be designed to avoid disturbing land in sensitive areas of the site (e.g., natural watercourses, steep slopes), and to incorporate unique or desirable existing vegetation into the site's landscaping plan. Clearly marking and leaving a buffer area around these unique areas during construction will help to preserve these areas as well as take advantage of natural erosion prevention and sediment trapping.

Existing vegetation to be preserved on the site must be protected from mechanical and other injury while the land is being developed. The purpose of protecting existing vegetation is to ensure the survival of desirable vegetation for shade, beautification, and erosion control. Mature vegetation has extensive root systems that help to hold soil in place, thus reducing erosion. In addition, vegetation helps keep soil from drying rapidly and becoming susceptible to erosion. To effectively save existing vegetation, no disturbances of any kind should be allowed within a defined area around the vegetation. For trees, no construction activity should occur within the drip line of the tree.

Timing

- Provide for preservation of existing vegetation prior to the commencement of clearing and grubbing operations or other soil disturbing activities in areas where no construction activity is planned or will occur at a later date.

Design and Layout

- Mark areas to be preserved with temporary fencing. Include sufficient setback to protect roots.
  - Orange colored plastic mesh fencing works well.
  - Use appropriate fence posts and adequate post spacing and depth to completely support the fence in an upright position.
- Locate temporary roadways, stockpiles, and layout areas to avoid stands of trees, shrubs, and grass.
- Consider the impact of grade changes to existing vegetation and the root zone.
- Maintain existing irrigation systems where feasible. Temporary irrigation may be required.
- Instruct employees and subcontractors to honor protective devices. Prohibit heavy equipment, vehicular traffic, or storage of construction materials within the protected area.

Costs

There is little cost associated with preserving existing vegetation if properly planned during the project design, and these costs may be offset by aesthetic benefits that enhance property values. During construction, the cost for preserving existing vegetation will likely be less than the cost of applying erosion and sediment controls to the disturbed area. Replacing vegetation inadvertently destroyed during construction can be extremely expensive, sometimes in excess of $10,000 per tree.

Inspection and Maintenance

During construction, the limits of disturbance should remain clearly marked at all times. Irrigation or maintenance of existing vegetation should be described in the landscaping plan. If damage to protected trees still occurs, maintenance guidelines described below should be followed:

- Verify that protective measures remain in place. Restore damaged protection measures immediately.
- Serious tree injuries shall be attended to by an arborist.
- Damage to the crown, trunk, or root system of a retained tree shall be repaired immediately.
- Trench as far from tree trunks as possible, usually outside of the tree drip line or canopy. Curve trenches around trees to avoid large roots or root concentrations. If roots are encountered, consider tunneling under them. When trenching or tunneling near or under trees to be retained, place tunnels at least 18 in. below the ground surface, and not below the tree center to minimize impact on the roots.
- Do not leave tree roots exposed to air. Cover exposed roots with soil as soon as possible. If soil covering is not practical, protect exposed roots with wet burlap or peat moss until the tunnel or trench is ready for backfill.
- Cleanly remove the ends of damaged roots with a smooth cut.
- Fill trenches and tunnels as soon as possible. Careful filling and tamping will eliminate air spaces in the soil, which can damage roots.
- If bark damage occurs, cut back all loosened bark into the undamaged area, with the cut tapered at the top and bottom and drainage provided at the base of the wood. Limit cutting the undamaged area as much as possible.
- Aerate soil that has been compacted over a trees root zone by punching holes 12 in. deep with an iron bar, and moving the bar back and forth until the soil is loosened. Place holes 18 in. apart throughout the area of compacted soil under the tree crown.
- Fertilization
  - Fertilize stressed or damaged broadleaf trees to aid recovery.
  - Fertilize trees in the late fall or early spring.

- Apply fertilizer to the soil over the feeder roots and in accordance with label instructions, but never closer than 3 ft to the trunk. Increase the fertilized area by one-fourth of the crown area for conifers that have extended root systems.

- Retain protective measures until all other construction activity is complete to avoid damage during site cleanup and stabilization.

References

County of Sacramento Tree Preservation Ordinance, September 1981.

Stormwater Quality Handbooks Construction Site Best Management Practices (BMPs) Manual, State of California Department of Transportation (Caltrans), November 2000.

Stormwater Management of the Puget Sound Basin, Technical Manual, Publication #91-75, Washington State Department of Ecology, February 1992.

Water Quality Management Plan for The Lake Tahoe Region, Volume II, Handbook of Management Practices, Tahoe Regional Planning Agency, November 1988.

Hydraulic Mulch EC-3

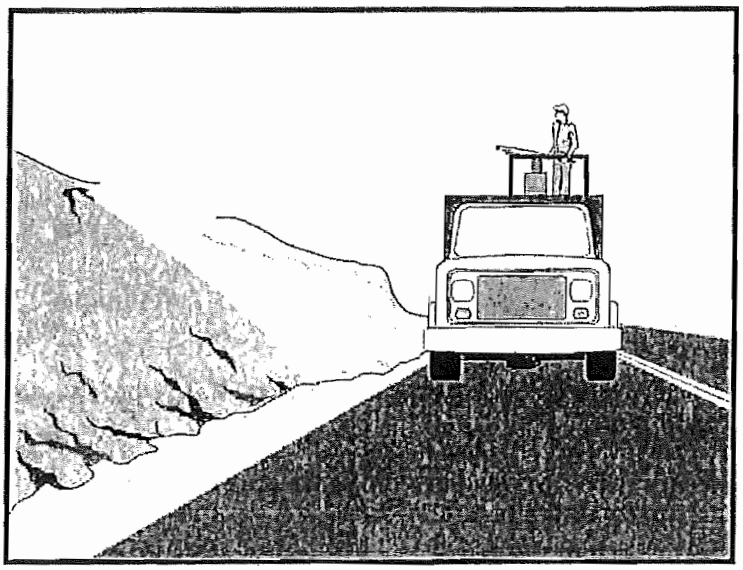

Categories

EC	Erosion Control	☑
SE	Sediment Control	
TC	Tracking Control	
WE	Wind Erosion Control	☒
NS	Non-Stormwater Management Control	
WM	Waste Management and Materials Pollution Control	

Legend:

☑ **Primary Category**

☒ **Secondary Category**

Targeted Constituents

Sediment	☑
Nutrients	
Trash	
Metals	
Bacteria	
Oil and Grease	
Organics	

Potential Alternatives

EC-4 Hydroseeding

EC-5 Soil Binders

EC-6 Straw Mulch

EC-7 Geotextiles and Mats

EC-8 Wood Mulching

EC-14 Compost Blanket

EC-16 Non-Vegetative Stabilization

Description and Purpose

Hydraulic Mulch consists of various types of fibrous materials mixed with water and sprayed onto the soil surface in slurry form to provide a layer of temporary protection from wind and water erosion.

Suitable Applications

Hydraulic mulch as a temporary, stand alone, erosion control BMP is suitable for disturbed areas that require temporary protection from wind and water erosion until permanent soil stabilization activities commence. Examples include:

- Rough-graded areas that will remain inactive for longer than permit-required thresholds (e.g., 14 days) or otherwise require stabilization to minimize erosion or prevent sediment discharges.
- Soil stockpiles.
- Slopes with exposed soil between existing vegetation such as trees or shrubs.
- Slopes planted with live, container-grown vegetation or plugs.
- Slopes burned by wildfire.

Hydraulic mulch can also be applied to augment other erosion control BMPs such as:

CASQA
CALIFORNIA STORMWATER

- In conjunction with straw mulch (see EC-6 Straw Mulch) where the rate of hydraulic mulch is reduced to 100-500 lbs per acre and the slurry is applied over the straw as a tackifying agent to hold the straw in place.
- Supplemental application of soil amendments, such as fertilizer, lime, gypsum, soil bio-stimulants or compost.

Limitations

In general, hydraulic mulch is not limited by slope length, gradient or soil type. However, the following limitations typically apply:

- Most hydraulic mulch applications, particularly bonded fiber matrices (BFMs), require at least 24 hours to dry before rainfall occurs.
- Temporary applications (i.e., without a vegetative component) may require a second application in order to remain effective for an entire rainy season.
- Treatment areas must be accessible to hydraulic mulching equipment.
- Availability of water sources in remote areas for mixing and application.
- As a stand-alone temporary BMP, hydraulic mulches may need to be re-applied to maintain their erosion control effectiveness, typically after 6-12 months depending on the type of mulch used.
- Availability of hydraulic mulching equipment may be limited just prior to the rainy season and prior to storms due to high demand.
- Cellulose fiber mulches alone may not perform well on steep slopes or in course soils.

Implementation

- Where feasible, it is preferable to prepare soil surfaces prior to application by roughening embankments and fill areas with a crimping or punching type roller or by track walking.
- The majority of hydraulic mulch applications do not necessarily require surface/soil preparation (See EC-15 Soil Preparation) although in almost every case where re-vegetation is included as part of the practice, soil preparation can be beneficial. One of the advantages of hydraulic mulch over other erosion control methods is that it can be applied in areas where soil preparation is precluded by site conditions, such as steep slopes, rocky soils, or inaccessibility.
- Avoid mulch over spray onto roads, sidewalks, drainage channels, existing vegetation, etc.
- Hydraulic mulching is generally performed utilizing specialized machines that have a large water-holding/mixing tank and some form of mechanical agitation or other recirculation method to keep water, mulch and soil amendments in suspension. The mixed hydraulic slurry can be applied from a tower sprayer on top of the machine or by extending a hose to areas remote from the machine.

- Where possible apply hydraulic mulch from multiple directions to adequately cover the soil. Application from a single direction can result in shadowing, uneven coverage and failure of the BMP.
- Hydraulic mulch can also include a vegetative component, such as seed, rhizomes, or stolons (see EC-4 Hydraulic Seed).
- Typical hydraulic mulch application rates range from 2,000 pounds per acre for standard mulches (SMs) to 3,500 pounds per acre for BFMs. However, the required amount of hydraulic mulch to provide adequate coverage of exposed topsoil may appear to exceed the standard rates when the roughness of the soil surface is changed due to soil preparation methods (see EC-15 Soil Preparation) or by slope gradient.
- Other factors such as existing soil moisture and soil texture can have a profound effect on the amount of hydraulic mulch required (i.e. application rate) applied to achieve an erosion-resistant covering.
- Avoid use of mulch without a tackifier component, especially on slopes.
- Mulches used in the hydraulic mulch slurry can include:
  - Cellulose fiber
  - Thermally-processed wood fibers
  - Cotton
  - Synthetics
  - Compost (see EC-14, Compost Blanket)
- Additional guidance on the comparison and selection of temporary slope stabilization methods is provided in Appendix F of the Handbook.

Categories of Hydraulic Mulches

Standard Hydraulic Mulch (SM)

Standard hydraulic mulches are generally applied at a rate of 2,000 pounds per acre and are manufactured containing around 5% tackifier (i.e. soil binder), usually a plant-derived guar or psyllium type. Most standard mulches are green in color derived from food-color based dyes.

Hydraulic Matrices (HM) and Stabilized Fiber Matrices (SFM)

Hydraulic matrices and stabilized fiber matrices are slurries which contain increased levels of tackifiers/soil binders; usually 10% or more by weight. HMs and SFMs have improved performance compared to a standard hydraulic mulch (SM) because of the additional percentage of tackifier and because of their higher application rates, typically 2,500 – 4,000 pounds per acre. Hydraulic matrices can include a mixture of fibers, for example, a 50/50 blend of paper and wood fiber. In the case of an SFM, the tackifier/soil binder is specified as a polyacrylamide (PAM).

Bonded Fiber Matrix (BFM)

Bonded fiber matrices (BFMs) are hydraulically-applied systems of fibers, adhesives (typically guar based) and chemical cross-links. Upon drying, the slurry forms an erosion-resistant blanket that prevents soil erosion and promotes vegetation establishment. The cross-linked adhesive in the BFM should be biodegradable and should not dissolve or disperse upon re-wetting. BFMs are typically applied at rates from 3,000 to 4,000 lbs/acre based on the manufacturer's recommendation. BFMs should not be applied immediately before, during or immediately after rainfall or if the soil is saturated. Depending on the product, BFMs typically require 12 to 24 hours to dry and become effective.

Mechanically-Bonded Fiber Matrices (MBFM)

Mechanically-bonded fiber matrices (MBFMs) are hydraulically applied systems similar to BFM that use crimped synthetic fibers and PAM and are typically applied to a slope at a higher application rate than a standard BFM.

Hydraulic Compost Matrix (HCM)

Hydraulic compost matrix (HCM) is a field-derived practice whereby finely graded or sifted compost is introduced into the hydraulic mulch slurry. A guar-type tackifier can be added for steeper slope applications as well as any specified seed mixtures. A HCM can help to accelerate seed germination and growth. HCMs are particularly useful as an in-fill for three-dimensional re-vegetation geocomposites, such as turf reinforcement mats (TRM) (see EC-7 Geotextiles and Mats).

Costs

Average installed costs for hydraulic mulch categories are is provided in Table 1, below.

Table 1
HYDRAULIC MULCH BMPs
INSTALLED COSTS

BMP	Installed Cost/Acre
Standard Hydraulic Mulching (SM)	$1,700 - $3,600 per acre
Hydraulic Matrices (HM) and Stabilized Fiber Matrices	
Guar-based	$2,000 - $4,000 per acre
PAM-based	$2,500 - $5,610 per acre
Bonded Fiber Matrix (BFM)	$3,900 - $6,900 per acre
Mechanically Bonded Fiber Matrix (MBFM)	$4,500 - $6,000 per acre
Hydraulic Compost Matrix (HCM)	$3,000 - $3,500 per acre

Source: Caltrans Soil Stabilization BMP Research for Erosion and Sediment Controls, July 2007

Inspection and Maintenance

- Maintain an unbroken, temporary mulched ground cover throughout the period of construction when the soils are not being reworked.
- BMPs must be inspected in accordance with General Permit requirements for the associated project type and risk level. It is recommended that at a minimum, BMPs be inspected

weekly, prior to forecasted rain events, daily during extended rain events, and after the conclusion of rain events.

- Areas where erosion is evident should be repaired and BMPs re-applied as soon as possible. Care should be exercised to minimize the damage to protected areas while making repairs, as any area damaged will require re-application of BMPs.
- Compare the number of bags or weight of applied mulch to the area treated to determine actual application rates and compliance with specifications.

References

Soil Stabilization BMP Research for Erosion and Sediment Controls: Cost Survey Technical Memorandum, State of California Department of Transportation (Caltrans), July 2007.

Controlling Erosion of Construction Sites, Agricultural Information #347, U.S. Department of Agriculture (USDA), Natural Resources Conservation Service (NRCS) (formerly Soil Conservation Service – SCS).

Guides for Erosion and Sediment Control in California, USDA Soils Conservation Service, January 1991.

Manual of Standards of Erosion and Sediment Control Measures, Association of Bay Area Governments, May 1995.

Sedimentation and Erosion Control, An Inventory of Current Practices Draft, US EPA, April 1990.

Soil Erosion by Water, Agriculture Information Bulletin #513, U.S. Department of Agriculture, Soil Conservation Service.

Stormwater Quality Handbooks Construction Site Best Management Practices (BMPs) Manual, State of California Department of Transportation (Caltrans), March 2003.

Guidance Document: Soil Stabilization for Temporary Slopes, State of California Department of Transportation (Caltrans), November 1999

Stormwater Management of the Puget Sound Basin, Technical Manual, Publication #91-75, Washington State Department of Ecology, February 1992.

Water Quality Management Plan for the Lake Tahoe Region, Volume II, Handbook of Management Practices, Tahoe Regional Planning Agency, November 1988.

Hydroseeding

EC-4

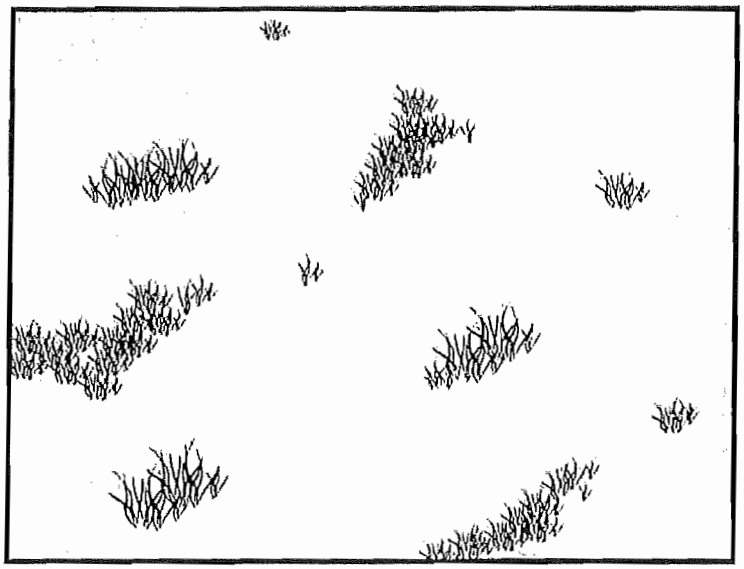

Categories

EC	Erosion Control	☑
SE	Sediment Control	
TC	Tracking Control	
WE	Wind Erosion Control	☒
NS	Non-Stormwater Management Control	
WM	Waste Management and Materials Pollution Control	

Legend:

☑ **Primary Category**

☒ **Secondary Category**

Targeted Constituents

Sediment	☑
Nutrients	
Trash	
Metals	
Bacteria	
Oil and Grease	
Organics	

Potential Alternatives

EC-3 Hydraulic Mulch

EC-5 Soil Binders

EC-6 Straw Mulch

EC-7 Geotextiles and Mats

EC-8 Wood Mulching

EC-14 Compost Blanket

EC-16 Non-Vegetative Stabilization

Description and Purpose

Hydroseeding typically consists of applying a mixture of a hydraulic mulch, seed, fertilizer, and stabilizing emulsion with a hydraulic mulcher, to temporarily protect exposed soils from erosion by water and wind. Hydraulic seeding, or hydroseeding, is simply the method by which temporary or permanent seed is applied to the soil surface.

Suitable Applications

Hydroseeding is suitable for disturbed areas requiring temporary protection until permanent stabilization is established, for disturbed areas that will be re-disturbed following an extended period of inactivity, or to apply permanent stabilization measures. Hydroseeding without mulch or other cover (e.g. EC-7, Erosion Control Blanket) is not a stand-alone erosion control BMP and should be combined with additional measures until vegetation establishment.

Typical applications for hydroseeding include:

- Disturbed soil/graded areas where permanent stabilization or continued earthwork is not anticipated prior to seed germination.
- Cleared and graded areas exposed to seasonal rains or temporary irrigation.
- Areas not subject to heavy wear by construction equipment or high traffic.

CASQA
CALIFORNIA STORMWATER

Limitations

- Availability of hydroseeding equipment may be limited just prior to the rainy season and prior to storms due to high demand.
- Hydraulic seed should be applied with hydraulic mulch or a stand-alone hydroseed application should be followed by one of the following:
  - Straw mulch (see Straw Mulch EC-6)
  - Rolled erosion control products (see Geotextiles and Mats EC-7)
  - Application of Compost Blanket (see Compost Blanket EC-14)

  Hydraulic seed may be used alone only on small flat surfaces when there is sufficient time in the season to ensure adequate vegetation establishment and coverage to provide adequate erosion control.
- Hydraulic seed without mulch does not provide immediate erosion control.
- Temporary seeding may not be appropriate for steep slopes (i.e., slopes readily prone to rill erosion or without sufficient topsoil).
- Temporary seeding may not be appropriate in dry periods without supplemental irrigation.
- Temporary vegetation may have to be removed before permanent vegetation is applied.
- Temporary vegetation may not be appropriate for short term inactivity (i.e. less than 3-6 months).

Implementation

In order to select appropriate hydraulic seed mixtures, an evaluation of site conditions should be performed with respect to:

- Soil conditions
- Site topography and exposure (sun/wind)
- Season and climate
- Vegetation types
- Maintenance requirements
- Sensitive adjacent areas
- Water availability
- Plans for permanent vegetation

The local office of the U.S.D.A. Natural Resources Conservation Service (NRCS) is an excellent source of information on appropriate seed mixes.

The following steps should be followed for implementation:

- Where appropriate or feasible, soil should be prepared to receive the seed by disking or otherwise scarifying (See EC-15, Soil Preparation) the surface to eliminate crust, improve air and water infiltration and create a more favorable environment for germination and growth.

- Avoid use of hydraulic seed in areas where the BMP would be incompatible with future earthwork activities.
- Hydraulic seed can be applied using a multiple step or one step process.
  - In a multiple step process, hydraulic seed is applied first, followed by mulch or a Rolled Erosion Control Product (RECP).
  - In the one step process, hydraulic seed is applied with hydraulic mulch in a hydraulic matrix. When the one step process is used to apply the mixture of fiber, seed, etc., the seed rate should be increased to compensate for all seeds not having direct contact with the soil.
- All hydraulically seeded areas should have mulch, or alternate erosion control cover to keep seeds in place and to moderate soil moisture and temperature until the seeds germinate and grow.
- All seeds should be in conformance with the California State Seed Law of the Department of Agriculture. Each seed bag should be delivered to the site sealed and clearly marked as to species, purity, percent germination, dealer's guarantee, and dates of test. The container should be labeled to clearly reflect the amount of Pure Live Seed (PLS) contained. All legume seed should be pellet inoculated. Inoculant sources should be species specific and should be applied at a rate of 2 lb of inoculant per 100 lb seed.
- Commercial fertilizer should conform to the requirements of the California Food and Agricultural Code, which can be found at http://www.leginfo.ca.gov/.html/fac_table_of_contents.html. Fertilizer should be pelleted or granular form.
- Follow up applications should be made as needed to cover areas of poor coverage or germination/vegetation establishment and to maintain adequate soil protection.
- Avoid over spray onto roads, sidewalks, drainage channels, existing vegetation, etc.
- Additional guidance on the comparison and selection of temporary slope stabilization methods is provided in Appendix F of the Handbook.

Costs

Average cost for installation and maintenance may vary from as low as $1,900 per acre for flat slopes and stable soils, to $4,000 per acre for moderate to steep slopes and/or erosive soils. Cost of seed mixtures vary based on types of required vegetation.

BMP	Installed Cost per Acre
Hydraulic Seed	$1,900-$4,000

Source: Caltrans Soil Stabilization BMP Research for Erosion and Sediment Controls, July 2007

Inspection and Maintenance

- BMPs must be inspected in accordance with General Permit requirements for the associated project type and risk level. It is recommended that at a minimum, BMPs be inspected weekly, prior to forecasted rain events, daily during extended rain events, and after the conclusion of rain events.
- Areas where erosion is evident should be repaired and BMPs re-applied as soon as possible. Care should be exercised to minimize the damage to protected areas while making repairs, as any area damaged will require re-application of BMPs.
- Where seeds fail to germinate, or they germinate and die, the area must be re-seeded, fertilized, and mulched within the planting season, using not less than half the original application rates.
- Irrigation systems, if applicable, should be inspected daily while in use to identify system malfunctions and line breaks. When line breaks are detected, the system must be shut down immediately and breaks repaired before the system is put back into operation.
- Irrigation systems should be inspected for complete coverage and adjusted as needed to maintain complete coverage.

References

Soil Stabilization BMP Research for Erosion and Sediment Controls: Cost Survey Technical Memorandum, State of California Department of Transportation (Caltrans), July 2007.

Stormwater Quality Handbooks Construction Site Best Management Practices (BMPs) Manual, State of California Department of Transportation (Caltrans), March 2003.

Guidance Document: Soil Stabilization for Temporary Slopes, State of California Department of Transportation (Caltrans), November 1999.

Straw Mulch

EC-6

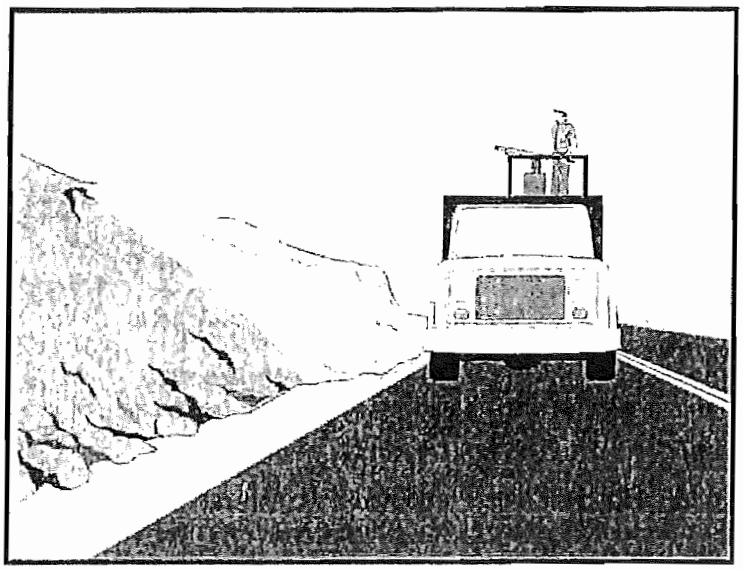

Categories

EC	Erosion Control	☑
SE	Sediment Control	
TC	Tracking Control	
WE	Wind Erosion Control	☒
NS	Non-Stormwater Management Control	
WM	Waste Management and Materials Pollution Control	

Legend:

☑ **Primary Category**

☒ **Secondary Category**

Targeted Constituents

Sediment	☑
Nutrients	
Trash	
Metals	
Bacteria	
Oil and Grease	
Organics	

Potential Alternatives

EC-3 Hydraulic Mulch

EC-4 Hydroseeding

EC-5 Soil Binders

EC-7 Geotextiles and Mats

EC-8 Wood Mulching

EC-14 Compost Blanket

Description and Purpose

Straw mulch consists of placing a uniform layer of straw and incorporating it into the soil with a studded roller or crimper, or anchoring it with a tackifier or stabilizing emulsion. Straw mulch protects the soil surface from the impact of rain drops, preventing soil particles from becoming dislodged.

Suitable Applications

Straw mulch is suitable for disturbed areas requiring temporary protection until permanent stabilization is established. Straw mulch can be specified for the following applications:

- As a stand-alone BMP on disturbed areas until soils can be prepared for permanent vegetation. The longevity of straw mulch is typically less than six months.
- Applied in combination with temporary seeding strategies
- Applied in combination with permanent seeding strategies to enhance plant establishment and final soil stabilization
- Applied around containerized plantings to control erosion until the plants become established to provide permanent stabilization

Limitations

- Availability of straw and straw blowing equipment may be limited just prior to the rainy season and prior to storms due to high demand.

CASQA

CALIFORNIA STORMWATER

- There is a potential for introduction of weed seed and unwanted plant material if weed-free agricultural straw is not specified.
- Straw mulch applied by hand is more time intensive and potentially costly.
- Wind may limit application of straw and blow straw into undesired locations.
- May have to be removed prior to permanent seeding or prior to further earthwork.
- "Punching" of straw does not work in sandy soils, necessitating the use of tackifiers.
- Potential fugitive dust control issues associated with straw applications can occur. Application of a stabilizing emulsion or a water stream at the same time straw is being blown can reduce this problem.
- Use of plastic netting should be avoided in areas where wildlife may be entrapped and may be prohibited for projects in certain areas with sensitive wildlife species, especially reptiles and amphibians.

Implementation

- Straw should be derived from weed-free wheat, rice, or barley. Where required by the plans, specifications, permits, or environmental documents, native grass straw should be used.
- Use tackifier to anchor straw mulch to the soil on slopes.
- Crimping, punch roller-type rollers, or track walking may also be used to incorporate straw mulch into the soil on slopes. Track walking can be used where other methods are impractical.
- Avoid placing straw onto roads, sidewalks, drainage channels, sound walls, existing vegetation, etc.
- Straw mulch with tackifier should not be applied during or immediately before rainfall.
- Additional guidance on the comparison and selection of temporary slope stabilization methods is provided in Appendix F of the Handbook.

Application Procedures

- When using a tackifier to anchor the straw mulch, roughen embankment or fill areas by rolling with a crimping or punching-type roller or by track walking before placing the straw mulch. Track walking should only be used where rolling is impractical.
- Apply straw at a rate of between 3,000 and 4,000 lb/acre, either by machine or by hand distribution and provide 100% ground cover. A lighter application is used for flat surfaces and a heavier application is used for slopes.
- Evenly distribute straw mulch on the soil surface.
- Anchoring straw mulch to the soil surface by "punching" it into the soil mechanically (incorporating) can be used in lieu of a tackifier.

- Methods for holding the straw mulch in place depend upon the slope steepness, accessibility, soil conditions, and longevity.
  - A tackifier acts to glue the straw fibers together and to the soil surface. The tackifier should be selected based on longevity and ability to hold the fibers in place. A tackifier is typically applied at a rate of 125 lb/acre. In windy conditions, the rates are typically 180 lb/acre.
  - On very small areas, a spade or shovel can be used to punch in straw mulch.
  - On slopes with soils that are stable enough and of sufficient gradient to safely support construction equipment without contributing to compaction and instability problems, straw can be "punched" into the ground using a knife blade roller or a straight bladed coulter, known commercially as a "crimper."

Costs

Average annual cost for installation and maintenance is included in the table below. Application by hand is more time intensive and potentially more costly.

BMP	Unit Cost per Acre
Straw mulch, crimped or punched	$2,458-$5,375
Straw mulch with tackifier	$1,823-$4,802

Source: Caltrans Soil Stabilization BMP Research for Erosion and Sediment Controls, July 2007

Inspection and Maintenance

- BMPs must be inspected in accordance with General Permit requirements for the associated project type and risk level. It is recommended that at a minimum, BMPs be inspected weekly, prior to forecasted rain events, daily during extended rain events, and after the conclusion of rain events.
- Areas where erosion is evident should be repaired and BMPs re-applied as soon as possible. Care should be exercised to minimize the damage to protected areas while making repairs, as any area damaged will require re-application of BMPs.
- The key consideration in inspection and maintenance is that the straw needs to last long enough to achieve erosion control objectives. Straw mulch as a stand-alone BMP is temporary and is not suited for long-term erosion control.
- Maintain an unbroken, temporary mulched ground cover while disturbed soil areas are inactive. Repair any damaged ground cover and re-mulch exposed areas.
- Reapplication of straw mulch and tackifier may be required to maintain effective soil stabilization over disturbed areas and slopes.

References

Soil Stabilization BMP Research for Erosion and Sediment Controls: Cost Survey Technical Memorandum, State of California Department of Transportation (Caltrans), July 2007.

Erosion and Sediment Control Manual, Oregon Department of Environmental Quality, February 2005.

Controlling Erosion of Construction Sites, Agricultural Information Bulletin #347, U.S. Department of Agriculture (USDA), Natural Resources Conservation Service (NRCS) (formerly Soil Conservation Service – SCS).

Guides for Erosion and Sediment Control in California, USDA Soils Conservation Service, January 1991.

Manual of Standards of Erosion and Sediment Control Measures, Association of Bay Area Governments, May 1995.

Soil Erosion by Water, Agricultural Information Bulletin #513, U.S. Department of Agriculture, Soil Conservation Service.

Stormwater Quality Handbooks Construction Site Best Management Practices (BMPs) Manual, State of California Department of Transportation (Caltrans), March 2003.

Stormwater Management of the Puget Sound Basin, Technical Manual, Publication #91-75, Washington State Department of Ecology, February 1992.

Water Quality Management Plan for the Lake Tahoe Region, Volume II, Handbook of Management Practices, Tahoe Regional Planning Agency, November 1988.

Geotextiles and Mats

EC-7

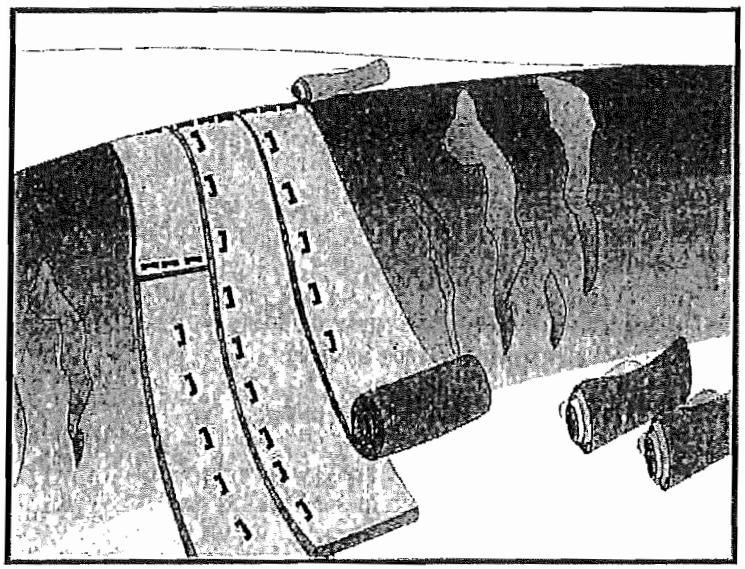

Categories

EC	Erosion Control	☑
SE	Sediment Control	
TC	Tracking Control	
WE	Wind Erosion Control	☒
NS	Non-Stormwater Management Control	
WM	Waste Management and Materials Pollution Control	

Legend:

☑ **Primary Category**

☒ **Secondary Category**

Targeted Constituents

Sediment	☑
Nutrients	
Trash	
Metals	
Bacteria	
Oil and Grease	
Organics	

Potential Alternatives

EC-3 Hydraulic Mulch

EC-4 Hydroseeding

Description and Purpose

Mattings, or Rolled Erosion Control Products (RECPs), can be made of natural or synthetic materials or a combination of the two. RECPs are used to cover the soil surface to reduce erosion from rainfall impact, hold soil in place, and absorb and hold moisture near the soil surface. Additionally, RECPs may be used to stabilize soils until vegetation is established or to reinforce non-woody surface vegetation.

Suitable Applications

RECPs are typically applied on slopes where erosion hazard is high and vegetation will be slow to establish. Mattings are also used on stream banks, swales and other drainage channels where moving water at velocities between 3 ft/s and 6 ft/s are likely to cause scour and wash out new vegetation, and in areas where the soil surface is disturbed and where existing vegetation has been removed. RECPs may also be used when seeding cannot occur (e.g., late season construction and/or the arrival of an early rain season). RECPs should be considered when the soils are fine grained and potentially erosive. RECPs should be considered in the following situations.

- Steep slopes, generally steeper than 3:1 (H:V)
- Slopes where the erosion potential is high
- Slopes and disturbed soils where mulch must be anchored
- Disturbed areas where plants are slow to develop

CASQA
CALIFORNIA STORMWATER

- Channels with flows exceeding 3.3 ft/s
- Channels to be vegetated
- Stockpiles
- Slopes adjacent to water bodies

Limitations

- RECP installed costs are generally higher than other erosion control BMPs, limiting their use to areas where other BMPs are ineffective (e.g. channels, steep slopes).
- RECPs may delay seed germination, due to reduction in soil temperature.
- RECPs are generally not suitable for excessively rocky sites or areas where the final vegetation will be mowed (since staples and netting can catch in mowers). If a staple or pin cannot be driven into the soil because the underlying soil is too hard or rocky, then an alternative BMP should be selected.
- If used for temporary erosion control, RECPs should be removed and disposed of prior to application of permanent soil stabilization measures.
- The use of plastic should be limited to covering stockpiles or very small graded areas for short periods of time (such as through one imminent storm event) until more environmentally friendly measures, such as seeding and mulching, may be installed.
    - Plastic sheeting is easily vandalized, easily torn, photodegradable, and must be disposed of at a landfill.
    - Plastic sheeting results in 100% runoff, which may cause serious erosion problems in the areas receiving the increased flow.
- RECPs may have limitations based on soil type, slope gradient, or channel flow rate; consult the manufacturer for proper selection.
- Not suitable for areas that have foot traffic (tripping hazard) – e.g., pad areas around buildings under construction.
- RECPs that incorporate a plastic netting (e.g. straw blanket typically uses a plastic netting to hold the straw in place) may not be suitable near known wildlife habitat. Wildlife can become trapped in the plastic netting.
- RECPs may have limitations in extremely windy climates. However, when RECPs are properly trenched at the top and bottom and stapled in accordance with the manufacturer's recommendations, problems with wind can be minimized.

Implementation

Material Selection

- Natural RECPs have been found to be effective where re-vegetation will be provided by re-seeding. The choice of material should be based on the size of area, side slopes, surface conditions such as hardness, moisture, weed growth, and availability of materials.

- Additional guidance on the comparison and selection of temporary slope stabilization methods is provided in Appendix F of the Handbook.

- The following natural and synthetic RECPs are commonly used:

Geotextiles

- Material can be a woven or a non-woven polypropylene fabric with minimum thickness of 0.06 in., minimum width of 12 ft and should have minimum tensile strength of 150 lbs (warp), 80 lbs (fill) in conformance with the requirements in ASTM Designation: D 4632. The permittivity of the fabric should be approximately 0.07 sec^{-1} in conformance with the requirements in ASTM Designation: D4491. The fabric should have an ultraviolet (UV) stability of 70 percent in conformance with the requirements in ASTM designation: D4355. Geotextile blankets must be secured in place with wire staples or sandbags and by keying into tops of slopes to prevent infiltration of surface waters under geotextile. Staples should be made of minimum 11 gauge steel wire and should be U-shaped with 8 in. legs and 2 in. crown.

- Geotextiles may be reused if they are suitable for the use intended.

Plastic Covers

- Generally plastic sheeting should only be used as stockpile covering or for very small graded areas for short periods of time (such as through one imminent storm event). If plastic sheeting must be used, choose a plastic that will withstand photo degradation.

- Plastic sheeting should have a minimum thickness of 6 mils, and must be keyed in at the top of slope (when used as a temporary slope protection) and firmly held in place with sandbags or other weights placed no more than 10 ft apart. Seams are typically taped or weighted down their entire length, and there should be at least a 12 in. to 24 in. overlap of all seams. Edges should be embedded a minimum of 6 in. in soil (when used as a temporary slope protection).

- All sheeting must be inspected periodically after installation and after significant rainstorms to check for erosion, undermining, and anchorage failure. Any failures must be repaired immediately. If washout or breakages occur, the material should be re-installed after repairing the damage to the slope.

Erosion Control Blankets/Mats

- Biodegradable RECPs are typically composed of jute fibers, curled wood fibers, straw, coconut fiber, or a combination of these materials. In order for an RECP to be considered 100% biodegradable, the netting, sewing or adhesive system that holds the biodegradable mulch fibers together must also be biodegradable. See typical installation details at the end of this fact sheet.

- **Jute** is a natural fiber that is made into a yarn that is loosely woven into a biodegradable mesh. The performance of jute as a stand-alone RECP is low. Most other RECPs outperform jute as a temporary erosion control product and therefore jute is not commonly used. It is designed to be used in conjunction with vegetation. The material is supplied in rolled strips, which should be secured to the soil with U-shaped staples or stakes in accordance with manufacturers' recommendations.

- **Excelsior** (curled wood fiber) blanket material should consist of machine produced mats of curled wood excelsior with 80 percent of the fiber 6 in. or longer. The excelsior blanket should be of consistent thickness. The wood fiber must be evenly distributed over the entire area of the blanket. The top surface of the blanket should be covered with a photodegradable extruded plastic mesh. The blanket should be smolder resistant without the use of chemical additives and should be non-toxic and non-injurious to plant and animal life. Excelsior blankets should be furnished in rolled strips, a minimum of 48 in. wide, and should have an average weight of 0.8 lb/yd^2, ±10 percent, at the time of manufacture. Excelsior blankets must be secured in place with wire staples. Staples should be made of minimum 11 gauge steel wire and should be U-shaped with 8 in. legs and 2 in. crown.

- **Straw blanket** should be machine produced mats of straw with a lightweight biodegradable netting top layer. The straw should be attached to the netting with biodegradable thread or glue strips. The straw blanket should be of consistent thickness. The straw should be evenly distributed over the entire area of the blanket. Straw blanket should be furnished in rolled strips a minimum of 6.5 ft wide, a minimum of 80 ft long and a minimum of 0.5 lb/yd^2. Straw blankets must be secured in place with wire staples. Staples should be made of minimum 11 gauge steel wire and should be U-shaped with 8 in. legs and 2 in. crown.

- **Wood fiber blanket** is composed of biodegradable fiber mulch with extruded plastic netting held together with adhesives. The material is designed to enhance re-vegetation. The material is furnished in rolled strips, which must be secured to the ground with U-shaped staples or stakes in accordance with manufacturers' recommendations.

- **Coconut fiber blanket** should be a machine produced mat of 100 percent coconut fiber with biodegradable netting on the top and bottom. The coconut fiber should be attached to the netting with biodegradable thread or glue strips. The coconut fiber blanket should be of consistent thickness. The coconut fiber should be evenly distributed over the entire area of the blanket. Coconut fiber blanket should be furnished in rolled strips with a minimum of 6.5 ft wide, a minimum of 80 ft. long and a minimum of 0.5 lb/yd^2. Coconut fiber blankets must be secured in place with wire staples. Staples should be made of minimum 11 gauge steel wire and should be U-shaped with 8 in. legs and 2 in. crown.

- **Coconut fiber mesh** is a thin permeable membrane made from coconut or corn fiber that is spun into a yarn and woven into a biodegradable mat. It is designed to be used in conjunction with vegetation and typically has longevity of several years. The material is supplied in rolled strips, which must be secured to the soil with U-shaped staples or stakes in accordance with manufacturers' recommendations.

- **Straw coconut fiber blanket** should be machine produced mats of 70 percent straw and 30 percent coconut fiber with a biodegradable netting top layer and a biodegradable bottom net. The straw and coconut fiber should be attached to the netting with biodegradable thread or glue strips. The straw coconut fiber blanket should be of consistent thickness. The straw and coconut fiber should be evenly distributed over the entire area of the blanket. Straw coconut fiber blanket should be furnished in rolled strips a minimum of 6.5 ft wide, a minimum of 80 ft long and a minimum of 0.5 lb/yd^2. Straw coconut fiber blankets must be secured in place with wire staples. Staples should be made of minimum 11 gauge steel wire and should be U-shaped with 8 in. legs and 2 in. crown.

- Non-biodegradable RECPs are typically composed of polypropylene, polyethylene, nylon or other synthetic fibers. In some cases, a combination of biodegradable and synthetic fibers is used to construct the RECP. Netting used to hold these fibers together is typically non-biodegradable as well.

  - **Plastic netting** is a lightweight biaxially oriented netting designed for securing loose mulches like straw or paper to soil surfaces to establish vegetation. The netting is photodegradable. The netting is supplied in rolled strips, which must be secured with U-shaped staples or stakes in accordance with manufacturers' recommendations.

  - **Plastic mesh** is an open weave geotextile that is composed of an extruded synthetic fiber woven into a mesh with an opening size of less than ¼ in. It is used with re-vegetation or may be used to secure loose fiber such as straw to the ground. The material is supplied in rolled strips, which must be secured to the soil with U-shaped staples or stakes in accordance with manufacturers' recommendations.

  - **Synthetic fiber with netting** is a mat that is composed of durable synthetic fibers treated to resist chemicals and ultraviolet light. The mat is a dense, three dimensional mesh of synthetic (typically polyolefin) fibers stitched between two polypropylene nets. The mats are designed to be re-vegetated and provide a permanent composite system of soil, roots, and geomatrix. The material is furnished in rolled strips, which must be secured with U-shaped staples or stakes in accordance with manufacturers' recommendations.

  - **Bonded synthetic fibers** consist of a three dimensional geomatrix nylon (or other synthetic) matting. Typically it has more than 90 percent open area, which facilitates root growth. It's tough root reinforcing system anchors vegetation and protects against hydraulic lift and shear forces created by high volume discharges. It can be installed over prepared soil, followed by seeding into the mat. Once vegetated, it becomes an invisible composite system of soil, roots, and geomatrix. The material is furnished in rolled strips that must be secured with U-shaped staples or stakes in accordance with manufacturers' recommendations.

  - **Combination synthetic and biodegradable RECPs** consist of biodegradable fibers, such as wood fiber or coconut fiber, with a heavy polypropylene net stitched to the top and a high strength continuous filament geomatrix or net stitched to the bottom. The material is designed to enhance re-vegetation. The material is furnished in rolled strips,

which must be secured with U-shaped staples or stakes in accordance with manufacturers' recommendations.

Site Preparation

- Proper soil preparation is essential to ensure complete contact of the RECP with the soil. Soil Roughening is not recommended in areas where RECPs will be installed.
- Grade and shape the area of installation.
- Remove all rocks, clods, vegetation or other obstructions so that the installed blankets or mats will have complete, direct contact with the soil.
- Prepare seedbed by loosening 2 to 3 in. of topsoil.

Seeding/Planting

Seed the area before blanket installation for erosion control and re-vegetation. Seeding after mat installation is often specified for turf reinforcement application. When seeding prior to blanket installation, all areas disturbed during blanket installation must be re-seeded. Where soil filling is specified for turf reinforcement mats (TRMs), seed the matting and the entire disturbed area after installation and prior to filling the mat with soil.

Fertilize and seed in accordance with seeding specifications or other types of landscaping plans. The protective matting can be laid over areas where grass has been planted and the seedlings have emerged. Where vines or other ground covers are to be planted, lay the protective matting first and then plant through matting according to design of planting.

Check Slots

Check slots shall be installed as required by the manufacturer.

Laying and Securing Matting

- Before laying the matting, all check slots should be installed and the seedbed should be friable, made free from clods, rocks, and roots. The surface should be compacted and finished according to the requirements of the manufacturer's recommendations.
- Mechanical or manual lay down equipment should be capable of handling full rolls of fabric and laying the fabric smoothly without wrinkles or folds. The equipment should meet the fabric manufacturer's recommendations or equivalent standards.

Anchoring

- U-shaped wire staples, metal geotextile stake pins, or triangular wooden stakes can be used to anchor mats and blankets to the ground surface.
- Wire staples should be made of minimum 11 gauge steel wire and should be U-shaped with 8 in. legs and 2 in. crown.
- Metal stake pins should be 0.188 in. diameter steel with a 1.5 in. steel washer at the head of the pin, and 8 in. in length.
- Wire staples and metal stakes should be driven flush to the soil surface.

Installation on Slopes

Installation should be in accordance with the manufacturer's recommendations. In general, these will be as follows:

- Begin at the top of the slope and anchor the blanket in a 6 in. deep by 6 in. wide trench. Backfill trench and tamp earth firmly.
- Unroll blanket down slope in the direction of water flow.
- Overlap the edges of adjacent parallel rolls 2 to 3 in. and staple every 3 ft (or greater, per manufacturer's specifications).
- When blankets must be spliced, place blankets end over end (shingle style) with 6 in. overlap. Staple through overlapped area, approximately 12 in. apart.
- Lay blankets loosely and maintain direct contact with the soil. Do not stretch.
- Staple blankets sufficiently to anchor blanket and maintain contact with the soil. Staples should be placed down the center and staggered with the staples placed along the edges. Steep slopes, 1:1 (H:V) to 2:1 (H:V), require a minimum of 2 staples/yd^2. Moderate slopes, 2:1 (H:V) to 3:1 (H:V), require a minimum of 1 ½ staples/yd^2. Check manufacturer's specifications to determine if a higher density staple pattern is required.

Installation in Channels

Installation should be in accordance with the manufacturer's recommendations. In general, these will be as follows:

- Dig initial anchor trench 12 in. deep and 6 in. wide across the channel at the lower end of the project area.
- Excavate intermittent check slots, 6 in. deep and 6 in. wide across the channel at 25 to 30 ft intervals along the channels.
- Cut longitudinal channel anchor trenches 4 in. deep and 4 in. wide along each side of the installation to bury edges of matting, whenever possible extend matting 2 to 3 in. above the crest of the channel side slopes.
- Beginning at the downstream end and in the center of the channel, place the initial end of the first roll in the anchor trench and secure with fastening devices at 12 in. intervals. Note: matting will initially be upside down in anchor trench.
- In the same manner, position adjacent rolls in anchor trench, overlapping the preceding roll a minimum of 3 in.
- Secure these initial ends of mats with anchors at 12 in. intervals, backfill and compact soil.
- Unroll center strip of matting upstream. Stop at next check slot or terminal anchor trench. Unroll adjacent mats upstream in similar fashion, maintaining a 3 in. overlap.

- Fold and secure all rolls of matting snugly into all transverse check slots. Lay mat in the bottom of the slot then fold back against itself. Anchor through both layers of mat at 12 in. intervals, then backfill and compact soil. Continue rolling all mat widths upstream to the next check slot or terminal anchor trench.
- Alternate method for non-critical installations: Place two rows of anchors on 6 in. centers at 25 to 30 ft. intervals in lieu of excavated check slots.
- Staple shingled lap spliced ends a minimum of 12 in. apart on 12 in. intervals.
- Place edges of outside mats in previously excavated longitudinal slots; anchor using prescribed staple pattern, backfill, and compact soil.
- Anchor, fill, and compact upstream end of mat in a 12 in. by 6 in. terminal trench.
- Secure mat to ground surface using U-shaped wire staples, geotextile pins, or wooden stakes.
- Seed and fill turf reinforcement matting with soil, if specified.

Soil Filling (if specified for turf reinforcement mat (TRM))

Installation should be in accordance with the manufacturer's recommendations. Typical installation guidelines are as follows:

- After seeding, spread and lightly rake ½-3/4 inches of fine topsoil into the TRM apertures to completely fill TRM thickness. Use backside of rake or other flat implement.
- Alternatively, if allowed by product specifications, spread topsoil using lightweight loader, backhoe, or other power equipment. Avoid sharp turns with equipment.
- Always consult the manufacturer's recommendations for installation.
- Do not drive tracked or heavy equipment over mat.
- Avoid any traffic over matting if loose or wet soil conditions exist.
- Use shovels, rakes, or brooms for fine grading and touch up.
- Smooth out soil filling just exposing top netting of mat.

Temporary Soil Stabilization Removal

- Temporary soil stabilization removed from the site of the work must be disposed of if necessary.

Costs

Installed costs can be relatively high compared to other BMPs. Approximate costs for installed materials are shown below:

Rolled Erosion Control Products		Installed Cost per Acre (2000)[1]	Estimated Cost per Acre (2009)[2]
Biodegradable	Jute Mesh	$6,000-$7,000	$6,600-$7,700
	Curled Wood Fiber	$8,000-$10,500	$8,800-$11,050
	Straw	$8,000-$10,500	$8,800-$11,050
	Wood Fiber	$8,000-$10,500	$8,800-$11,050
	Coconut Fiber	$13,000-$14,000	$14,300-$15,400
	Coconut Fiber Mesh	$30,000-$33,000	$33,000-$36,300
	Straw Coconut Fiber	$10,000-$12,000	$11,000-$13,200
Non-Biodegradable	Plastic Netting	$2,000-$2,200	$2,200-$2,220
	Plastic Mesh	$3,000-$3,500	$3,300-$3,850
	Synthetic Fiber with Netting	$34,000-$40,000	$37,400-$44,000
	Bonded Synthetic Fibers	$45,000-$55,000	$49,500-$60,500
	Combination with Biodegradable	$30,000-$36,000	$33,000-$39,600

1. Source: Erosion Control Pilot Study Report, Caltrans, June 2000.
2. 2009 costs reflect a 10% escalation over year 2000 costs. Escalation based on informal survey of industry trends. Note: Expected cost increase is offset by competitive economic conditions.

Inspection and Maintenance

- RECPs must be inspected in accordance with General Permit requirements for the associated project type and risk level. It is recommended that at a minimum, BMPs be inspected weekly, prior to forecasted rain events, daily during extended rain events, and after the conclusion of rain events.
- Areas where erosion is evident shall be repaired and BMPs reapplied as soon as possible. Care should be exercised to minimize the damage to protected areas while making repairs, as any area damaged will require reapplication of BMPs.
- If washout or breakage occurs, re-install the material after repairing the damage to the slope or channel.
- Make sure matting is uniformly in contact with the soil.
- Check that all the lap joints are secure.
- Check that staples are flush with the ground.

References

Erosion and Sediment Control Manual, Oregon Department of Environmental Quality, February 2005

Erosion Control Pilot Study Report, State of California Department of Transportation (Caltrans), June 2000.

Guides for Erosion and Sediment Controls in California, USDA Soils Conservation Service, January 1991.

National Management Measures to Control Nonpoint Source Pollution from Urban Areas, United States Environmental Protection Agency, 2002.

Stormwater Quality Handbooks Construction Site Best Management Practices (BMPs) Manual, State of California Department of Transportation (Caltrans), March 2003.

Guidance Document: Soil Stabilization for Temporary Slopes, State of California Department of Transportation (Caltrans), November 1999.

Stormwater Management of the Puget Sound Basin, Technical Manual, Publication #91-75, Washington State Department of Ecology, February 1992.

Water Quality Management Plan for The Lake Tahoe Region, Volume II, Handbook of Management Practices, Tahoe Regional Planning Agency, November 1988.

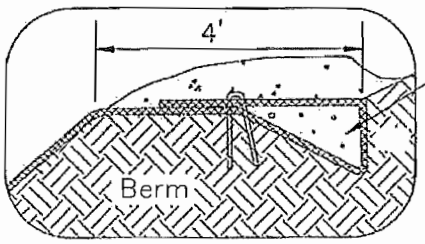

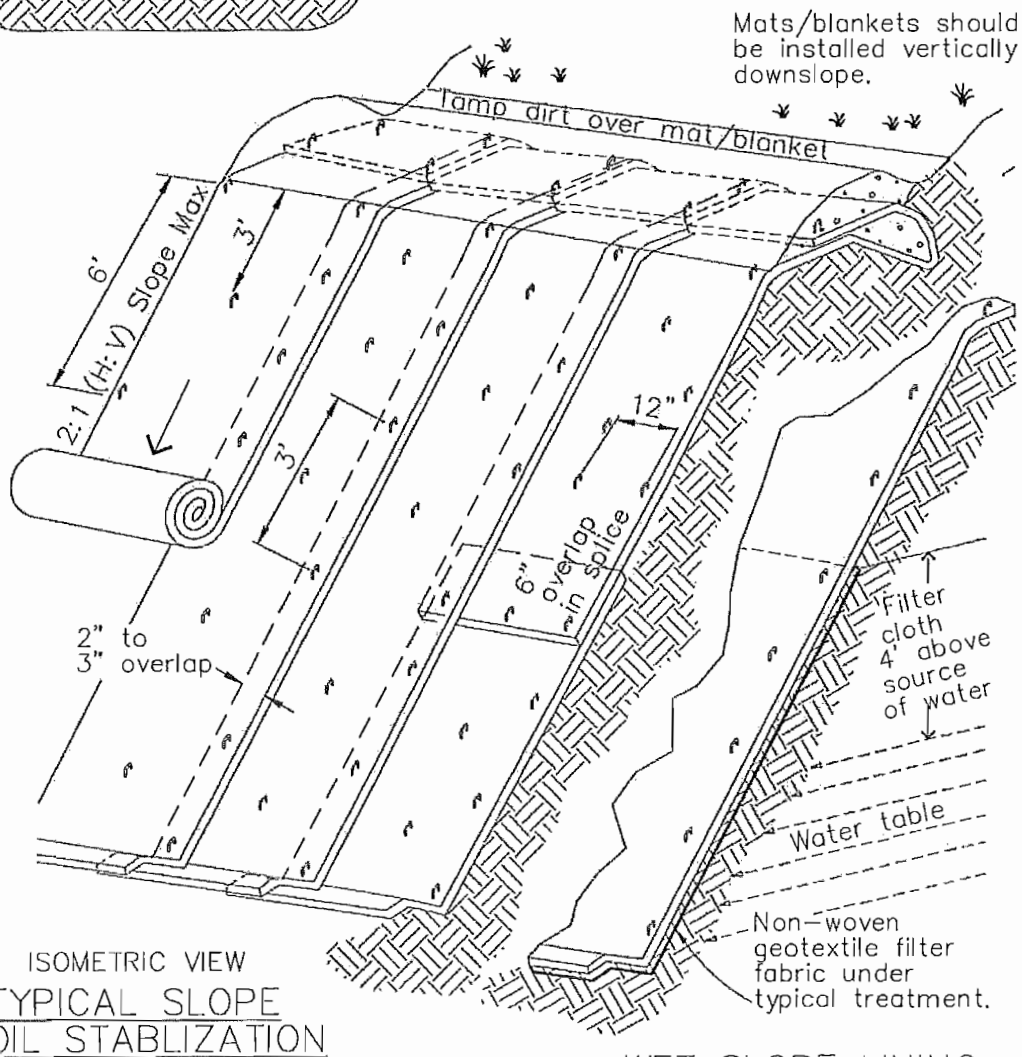

ISOMETRIC VIEW
TYPICAL SLOPE SOIL STABLIZATION
NTS

WET SLOPE LINING
NTS

NOTES:

1. Slope surface shall be free of rocks, clods, sticks and grass. Mats/blankets shall have good soil contact.
2. Lay blankets loosely and stake or staple to maintain direct contact with the soil. Do not stretch.
3. Install per manufacturer's recommendotions

TYPICAL INSTALLATION DETAIL

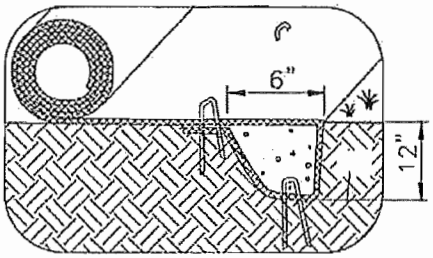

INITIAL CHANNEL ANCHOR TRENCH
NTS

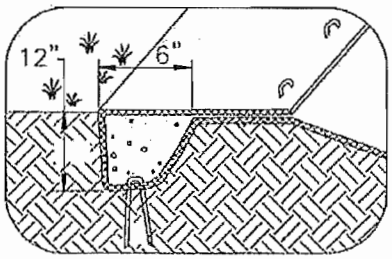

TERMINAL SLOPE AND CHANNEL ANCHOR TRENCH
NTS

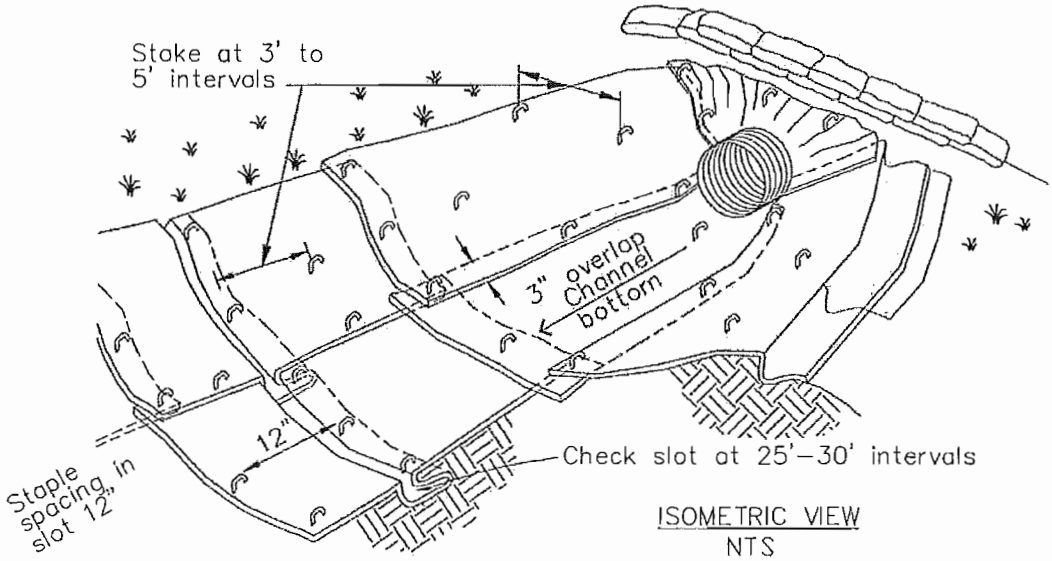

ISOMETRIC VIEW
NTS

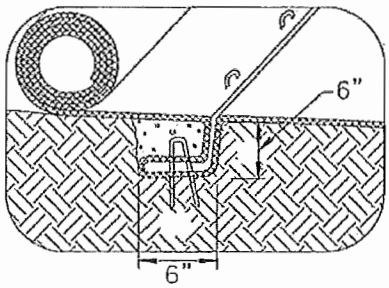

INTERMITTENT CHECK SLOT
NTS

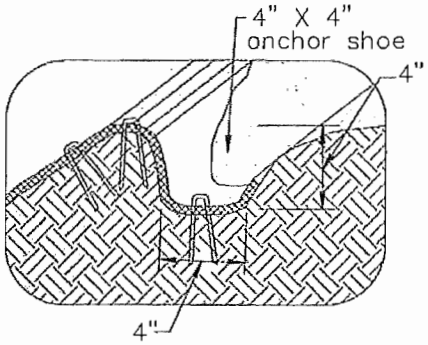

LONGITUDINAL ANCHOR TRENCH
NTS

NOTES:
1. Check slots to be constructed per manufacturers specifications.
2. Staking or stapling layout per manufacturers specifications.
3. Install per manufacturer's recommendations

TYPICAL INSTALLATION DETAIL

Earth Dikes and Drainage Swales EC-9

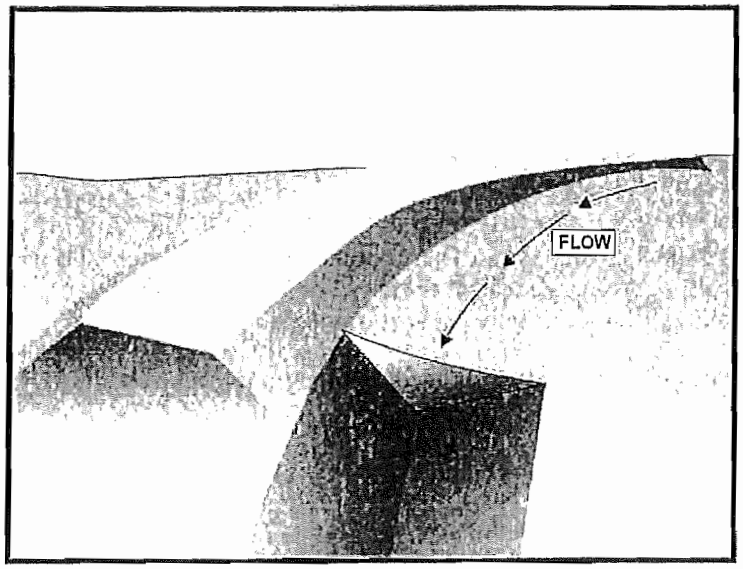

Categories

EC	Erosion Control	☑
SE	Sediment Control	
TC	Tracking Control	
WE	Wind Erosion Control	
NS	Non-Stormwater Management Control	
WM	Waste Management and Materials Pollution Control	

Legend:

☑ **Primary Objective**

☒ **Secondary Objective**

Targeted Constituents

Sediment	☑
Nutrients	
Trash	
Metals	
Bacteria	
Oil and Grease	
Organics	

Potential Alternatives

None

Description and Purpose

An earth dike is a temporary berm or ridge of compacted soil used to divert runoff or channel water to a desired location. A drainage swale is a shaped and sloped depression in the soil surface used to convey runoff to a desired location. Earth dikes and drainage swales are used to divert off site runoff around the construction site, divert runoff from stabilized areas and disturbed areas, and direct runoff into sediment basins or traps.

Suitable Applications

Earth dikes and drainage swales are suitable for use, individually or together, where runoff needs to be diverted from one area and conveyed to another.

- Earth dikes and drainage swales may be used:
  - To convey surface runoff down sloping land
  - To intercept and divert runoff to avoid sheet flow over sloped surfaces
  - To divert and direct runoff towards a stabilized watercourse, drainage pipe or channel
  - To intercept runoff from paved surfaces
  - Below steep grades where runoff begins to concentrate
  - Along roadways and facility improvements subject to flood drainage

- At the top of slopes to divert runon from adjacent or undisturbed slopes
- At bottom and mid slope locations to intercept sheet flow and convey concentrated flows
- Divert sediment laden runoff into sediment basins or traps

Limitations

Dikes should not be used for drainage areas greater than 10 acres or along slopes greater than 10 percent. For larger areas more permanent drainage structures should be built. All drainage structures should be built in compliance with local municipal requirements.

- Earth dikes may create more disturbed area on site and become barriers to construction equipment.
- Earth dikes must be stabilized immediately, which adds cost and maintenance concerns.
- Diverted stormwater may cause downstream flood damage.
- Dikes should not be constructed of soils that may be easily eroded.
- Regrading the site to remove the dike may add additional cost.
- Temporary drains and swales or any other diversion of runoff should not adversely impact upstream or downstream properties.
- Temporary drains and swales must conform to local floodplain management requirements.
- Earth dikes/drainage swales are not suitable as sediment trapping devices.
- It may be necessary to use other soil stabilization and sediment controls such as check dams, plastics, and blankets, to prevent scour and erosion in newly graded dikes, swales, and ditches.
- Sediment accumulation, scour depressions, and/or persistent non-stormwater discharges can result in areas of standing water suitable for mosquito production in drainage swales.

Implementation

The temporary earth dike is a berm or ridge of compacted soil, located in such a manner as to divert stormwater to a sediment trapping device or a stabilized outlet, thereby reducing the potential for erosion and offsite sedimentation. Earth dikes can also be used to divert runoff from off site and from undisturbed areas away from disturbed areas and to divert sheet flows away from unprotected slopes.

An earth dike does not itself control erosion or remove sediment from runoff. A dike prevents erosion by directing runoff to an erosion control device such as a sediment trap or directing runoff away from an erodible area. Temporary diversion dikes should not adversely impact adjacent properties and must conform to local floodplain management regulations, and should not be used in areas with slopes steeper than 10%.

Slopes that are formed during cut and fill operations should be protected from erosion by runoff. A combination of a temporary drainage swale and an earth dike at the top of a slope can divert

runoff to a location where it can be brought to the bottom of the slope (see EC-11, Slope Drains). A combination dike and swale is easily constructed by a single pass of a bulldozer or grader and compacted by a second pass of the tracks or wheels over the ridge. Diversion structures should be installed when the site is initially graded and remain in place until post construction BMPs are installed and the slopes are stabilized.

Diversion practices concentrate surface runoff, increasing its velocity and erosive force. Thus, the flow out of the drain or swale must be directed onto a stabilized area or into a grade stabilization structure. If significant erosion will occur, a swale should be stabilized using vegetation, chemical treatment, rock rip-rap, matting, or other physical means of stabilization. Any drain or swale that conveys sediment laden runoff must be diverted into a sediment basin or trap before it is discharged from the site.

General

- Care must be applied to correctly size and locate earth dikes, drainage swales. Excessively steep, unlined dikes, and swales are subject to erosion and gully formation.
- Conveyances should be stabilized.
- Use a lined ditch for high flow velocities.
- Select flow velocity based on careful evaluation of the risks due to erosion of the measure, soil types, overtopping, flow backups, washout, and drainage flow patterns for each project site.
- Compact any fills to prevent unequal settlement.
- Do not divert runoff onto other property without securing written authorization from the property owner.
- When possible, install and utilize permanent dikes, swales, and ditches early in the construction process.
- Provide stabilized outlets.

Earth Dikes

Temporary earth dikes are a practical, inexpensive BMP used to divert stormwater runoff. Temporary diversion dikes should be installed in the following manner:

- All dikes should be compacted by earth moving equipment.
- All dikes should have positive drainage to an outlet.
- All dikes should have 2:1 or flatter side slopes, 18 in. minimum height, and a minimum top width of 24 in. Wide top widths and flat slopes are usually needed at crossings for construction traffic.
- The outlet from the earth dike must function with a minimum of erosion. Runoff should be conveyed to a sediment trapping device such as a Sediment Trap (SE-3) or Sediment Basin

(SE-2) when either the dike channel or the drainage area above the dike are not adequately stabilized.

- Temporary stabilization may be achieved using seed and mulching for slopes less than 5% and either rip-rap or sod for slopes in excess of 5%. In either case, stabilization of the earth dike should be completed immediately after construction or prior to the first rain.
- If riprap is used to stabilize the channel formed along the toe of the dike, the following typical specifications apply:

Channel Grade	Riprap Stabilization
0.5-1.0%	4 in. Rock
1.1-2.0%	6 in. Rock
2.1-4.0%	8 in. Rock
4.1-5.0%	8 in. -12 in. Riprap

- The stone riprap, recycled concrete, etc. used for stabilization should be pressed into the soil with construction equipment.
- Filter cloth may be used to cover dikes in use for long periods.
- Construction activity on the earth dike should be kept to a minimum.

Drainage Swales

Drainage swales are only effective if they are properly installed. Swales are more effective than dikes because they tend to be more stable. The combination of a swale with a dike on the downhill side is the most cost effective diversion.

Standard engineering design criteria for small open channel and closed conveyance systems should be used (see the local drainage design manual). Unless local drainage design criteria state otherwise, drainage swales should be designed as follows:

- No more than 5 acres may drain to a temporary drainage swale.
- Place drainage swales above or below, not on, a cut or fill slope.
- Swale bottom width should be at least 2 ft
- Depth of the swale should be at least 18 in.
- Side slopes should be 2:1 or flatter.
- Drainage or swales should be laid at a grade of at least 1 percent, but not more than 15 percent.
- The swale must not be overtopped by the peak discharge from a 10-year storm, irrespective of the design criteria stated above.

- Remove all trees, stumps, obstructions, and other objectionable material from the swale when it is built.
- Compact any fill material along the path of the swale.
- Stabilize all swales immediately. Seed and mulch swales at a slope of less than 5 percent, and use rip-rap or sod for swales with a slope between 5 and 15 percent. For temporary swales, geotextiles and mats (EC-7) may provide immediate stabilization.
- Irrigation may be required to establish sufficient vegetation to prevent erosion.
- Do not operate construction vehicles across a swale unless a stabilized crossing is provided.
- Permanent drainage facilities must be designed by a professional engineer (see the local drainage design criteria for proper design).
- At a minimum, the drainage swale should conform to predevelopment drainage patterns and capacities.
- Construct the drainage swale with a positive grade to a stabilized outlet.
- Provide erosion protection or energy dissipation measures if the flow out of the drainage swale can reach an erosive velocity.

Costs

- Cost ranges from $15 to $55 per ft for both earthwork and stabilization and depends on availability of material, site location, and access.
- Small dikes: $2.50 - $6.50/linear ft; Large dikes: $2.50/yd^3.
- The cost of a drainage swale increases with drainage area and slope. Typical swales for controlling internal erosion are inexpensive, as they are quickly formed during routine earthwork.

Inspection and Maintenance

- Inspect BMPs prior to forecast rain, daily during extended rain events, after rain events, weekly during the rainy season, and at two-week intervals during the non-rainy season.
- Inspect BMPs subject to non-stormwater discharges daily while non-stormwater discharges occur.
- Inspect ditches and berms for washouts. Replace lost riprap, damaged linings or soil stabilizers as needed.
- Inspect channel linings, embankments, and beds of ditches and berms for erosion and accumulation of debris and sediment. Remove debris and sediment and repair linings and embankments as needed.
- Temporary conveyances should be completely removed as soon as the surrounding drainage area has been stabilized or at the completion of construction

References

Erosion and Sediment Control Handbook, S.J. Goldman, K. Jackson, T.A. Bursetynsky, P.E., McGraw Hill Book Company, 1986.

Manual of Standards of Erosion and Sediment Control Measures, Association of Bay Area Governments, May 1995.

Metzger, M.E. 2004. Managing mosquitoes in stormwater treatment devices. University of California Division of Agriculture and Natural Resources, Publication 8125. On-line: http://anrcatalog.ucdavis.edu/pdf/8125.pdf

National Association of Home Builders (NAHB). Stormwater Runoff & Nonpoint Source Pollution Control Guide for Builders and Developers. National Association of Home Builders, Washington, D.C., 1995

National Management Measures to Control Nonpoint Source Pollution from Urban Areas, United States Environmental Protection Agency, 2002.

Southeastern Wisconsin Regional Planning Commission (SWRPC). Costs of Urban Nonpoint Source Water Pollution Control Measures. Technical Report No. 31. Southeastern Wisconsin Regional Planning Commission, Waukesha, WI. 1991

Stormwater Quality Handbooks Construction Site Best Management Practices (BMPs) Manual, State of California Department of Transportation (Caltrans), November 2000.

Stormwater Management of the Puget Sound Basin, Technical Manual, Publication #91-75, Washington State Department of Ecology, February 1992.

Water Quality Management Plan for the Lake Tahoe Region, Volume II, Handbook of Management Practices, Tahoe Regional Planning Agency, November 1988.

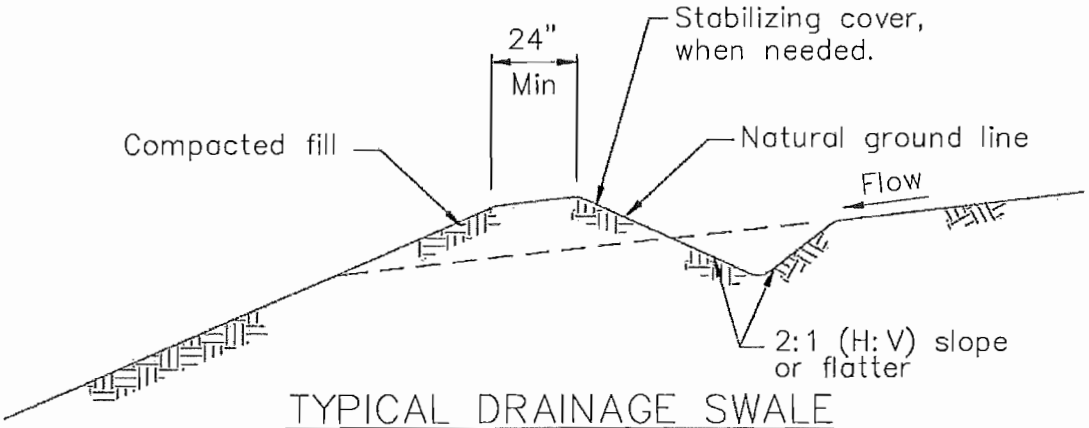

TYPICAL DRAINAGE SWALE
NOT TO SCALE

NOTES:

1. Stabilize inlet, outlets and slopes.
2. Properly compact the subgrade.

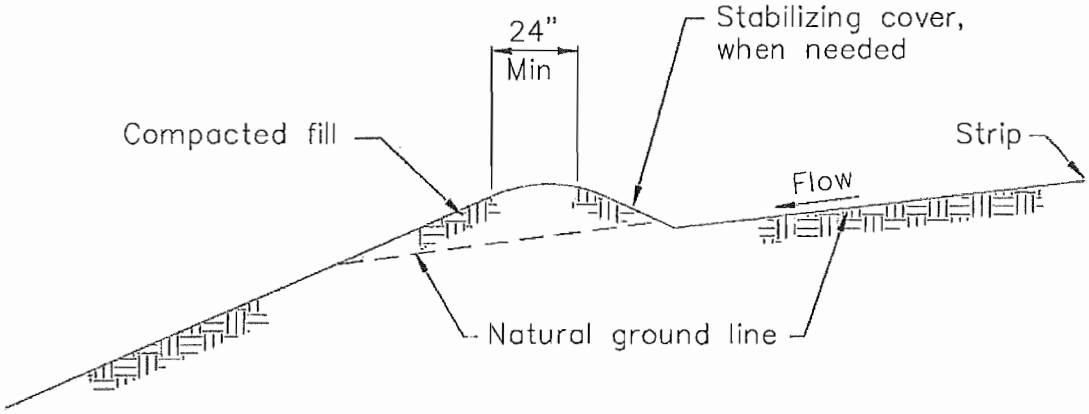

TYPICAL EARTH DIKE
NOT TO SCALE

Velocity Dissipation Devices EC-10

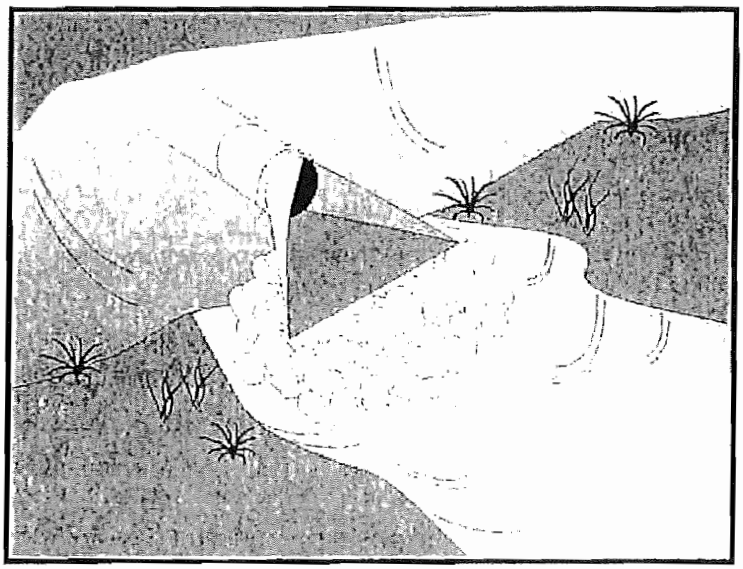

Categories

EC	Erosion Control	☑
SE	Sediment Control	
TC	Tracking Control	
WE	Wind Erosion Control	
NS	Non-Stormwater Management Control	
WM	Waste Management and Materials Pollution Control	

Legend:

☑ **Primary Objective**

☒ **Secondary Objective**

Targeted Constituents

Sediment	☑
Nutrients	
Trash	
Metals	
Bacteria	
Oil and Grease	
Organics	

Potential Alternatives

None

Description and Purpose

Outlet protection is a physical device composed of rock, grouted riprap, or concrete rubble, which is placed at the outlet of a pipe or channel to prevent scour of the soil caused by concentrated, high velocity flows.

Suitable Applications

Whenever discharge velocities and energies at the outlets of culverts, conduits, or channels are sufficient to erode the next downstream reach. This includes temporary diversion structures to divert runon during construction.

- These devices may be used at the following locations:
  - Outlets of pipes, drains, culverts, slope drains, diversion ditches, swales, conduits, or channels.
  - Outlets located at the bottom of mild to steep slopes.
  - Discharge outlets that carry continuous flows of water.
  - Outlets subject to short, intense flows of water, such as flash floods.
  - Points where lined conveyances discharge to unlined conveyances

Limitations

- Large storms or high flows can wash away the rock outlet protection and leave the area susceptible to erosion.

CASQA
CALIFORNIA STORMWATER QUALITY ASSOCIATION

- Sediment captured by the rock outlet protection may be difficult to remove without removing the rock.
- Outlet protection may negatively impact the channel habitat.
- Grouted riprap may break up in areas of freeze and thaw.
- If there is not adequate drainage, and water builds up behind grouted riprap, it may cause the grouted riprap to break up due to the resulting hydrostatic pressure.
- Sediment accumulation, scour depressions, and/or persistent non-stormwater discharges can result in areas of standing water suitable for mosquito production in velocity dissipation devices.

Implementation

General

Outlet protection is needed where discharge velocities and energies at the outlets of culverts, conduits or channels are sufficient to erode the immediate downstream reach. This practice protects the outlet from developing small eroded pools (plange pools), and protects against gully erosion resulting from scouring at a culvert mouth.

Design and Layout

As with most channel design projects, depth of flow, roughness, gradient, side slopes, discharge rate, and velocity should be considered in the outlet design. Compliance to local and state regulations should also be considered while working in environmentally sensitive streambeds. General recommendations for rock size and length of outlet protection mat are shown in the rock outlet protection figure in this BMP and should be considered minimums. The apron length and rock size gradation are determined using a combination of the discharge pipe diameter and estimate discharge rate: Select the longest apron length and largest rock size suggested by the pipe size and discharge rate. Where flows are conveyed in open channels such as ditches and swales, use the estimated discharge rate for selecting the apron length and rock size. Flows should be same as the culvert or channel design flow but never the less than the peak 5 year flow for temporary structures planned for one rainy season, or the 10 year peak flow for temporary structures planned for two or three rainy seasons.

- There are many types of energy dissipaters, with rock being the one that is represented in the attached figure.
- Best results are obtained when sound, durable, and angular rock is used.
- Install riprap, grouted riprap, or concrete apron at selected outlet. Riprap aprons are best suited for temporary use during construction. Grouted or wired tied rock riprap can minimize maintenance requirements.
- Rock outlet protection is usually less expensive and easier to install than concrete aprons or energy dissipaters. It also serves to trap sediment and reduce flow velocities.
- Carefully place riprap to avoid damaging the filter fabric.

- Stone 4 in. to 6 in. may be carefully dumped onto filter fabric from a height not to exceed 12 in.
- Stone 8 in. to 12 in. must be hand placed onto filter fabric, or the filter fabric may be covered with 4 in. of gravel and the 8 in. to 12 in. rock may be dumped from a height not to exceed 16 in.
- Stone greater than 12 in. shall only be dumped onto filter fabric protected with a layer of gravel with a thickness equal to one half the D_{50} rock size, and the dump height limited to twice the depth of the gravel protection layer thickness.

- For proper operation of apron: Align apron with receiving stream and keep straight throughout its length. If a curve is needed to fit site conditions, place it in upper section of apron.
- Outlets on slopes steeper than 10 percent should have additional protection.

Costs

Costs are low if material is readily available. If material is imported, costs will be higher. Average installed cost is $150 per device.

Inspection and Maintenance

- Inspect BMPs in accordance with General Permit requirements for the associated project type and risk level. It is recommended that at a minimum, BMPs be inspected weekly, prior to forecasted rain events, daily during extended rain events, and after the conclusion of rain events.
- Inspect BMPs subjected to non-stormwater discharges daily while non-stormwater discharges occur. Minimize areas of standing water by removing sediment blockages and filling scour depressions.
- Inspect apron for displacement of the riprap and damage to the underlying fabric. Repair fabric and replace riprap that has washed away. If riprap continues to wash away, consider using larger material.
- Inspect for scour beneath the riprap and around the outlet. Repair damage to slopes or underlying filter fabric immediately.
- Temporary devices should be completely removed as soon as the surrounding drainage area has been stabilized or at the completion of construction.

References

County of Sacramento Improvement Standards, Sacramento County, May 1989.

Erosion and Sediment Control Handbook, S.J. Goldman, K. Jackson, T.A. Bursztynsky, P.E., McGraw Hill Book Company, 1986.

Handbook of Steel Drainage & Highway Construction, American Iron and Steel Institute, 1983.

Manual of Standards of Erosion and Sediment Control Measures, Association of Bay Area Governments, May 1995.

Metzger, M.E. 2004. Managing mosquitoes in stormwater treatment devices. University of California Division of Agriculture and Natural Resources, Publication 8125. On-line: http://anrcatalog.ucdavis.edu/pdf/8125.pdf

Stormwater Quality Handbooks Construction Site Best Management Practices (BMPs) Manual, state of California Department of Transportation (Caltrans), November 2000.

Stormwater Management of the Puget Sound Basin, Technical Manual, Publication #91-75, Washington State Department of Ecology, February 1992.

Water Quality Management Plan for the Lake Tahoe Region, Volume II, Handbook of Management Practices, Tahoe Regional Planning Agency, November 1988.

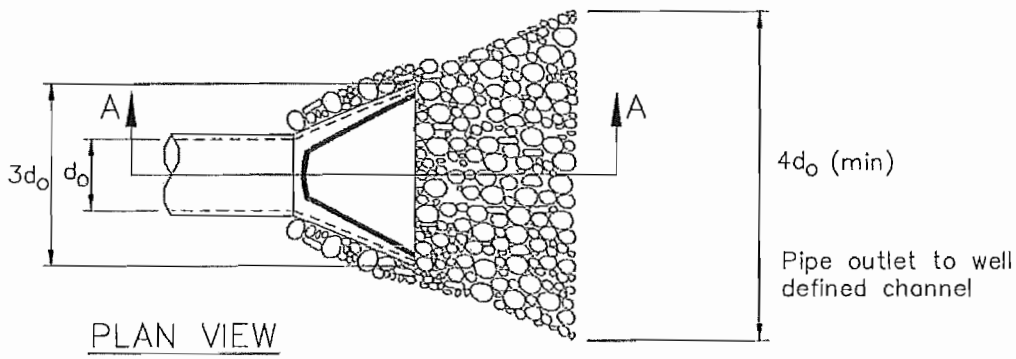

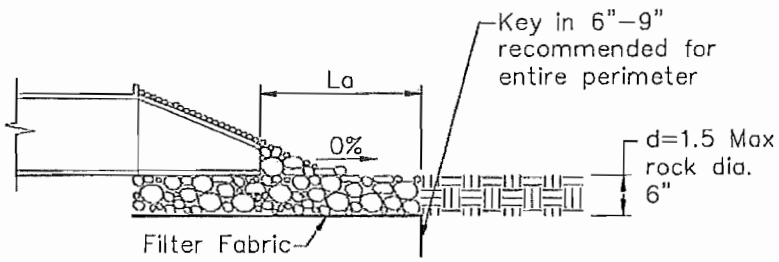

Pipe Diameter inches	Discharge ft^3/s	Apron Length, La ft	Rip Rap D_{50} Diameter Min inches
12	5	10	4
	10	13	6
18	10	10	6
	20	16	8
	30	23	12
	40	26	16
24	30	16	8
	40	26	8
	50	26	12
	60	30	16

For larger or higher flows consult a Registered Civil Engineer
Source: USDA - SCS

Slope Drains EC-11

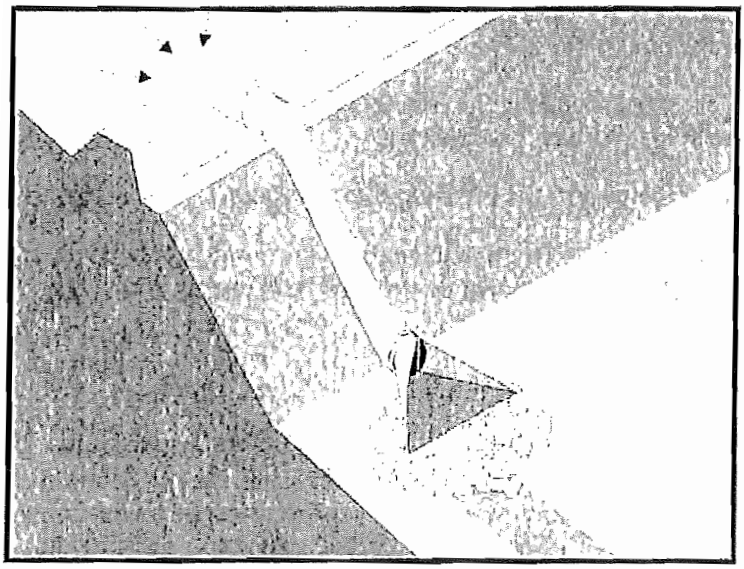

Categories		
EC	Erosion Control	☑
SE	Sediment Control	
TC	Tracking Control	
WE	Wind Erosion Control	
NS	Non-Stormwater Management Control	
WM	Waste Management and Materials Pollution Control	

Legend:

☑ **Primary Objective**

☒ **Secondary Objective**

Targeted Constituents	
Sediment	☑
Nutrients	
Trash	
Metals	
Bacteria	
Oil and Grease	
Organics	

Potential Alternatives

EC-9 Earth Dike, Drainage Swales

Description and Purpose

A slope drain is a pipe used to intercept and direct surface runoff or groundwater into a stabilized watercourse, trapping device, or stabilized area. Slope drains are used with earth dikes and drainage ditches to intercept and direct surface flow away from slope areas to protect cut or fill slopes.

Suitable Applications

- Where concentrated flow of surface runoff must be conveyed down a slope in order to prevent erosion.
- Drainage for top of slope diversion dikes or swales.
- Drainage for top of cut and fill slopes where water can accumulate.
- Emergency spillway for a sediment basin.

Limitations

Installation is critical for effective use of the pipe slope drain to minimize potential gully erosion.

- Maximum drainage area per slope drain is 10 acres. (For large areas use a paved chute, rock lined channel, or additional pipes.)
- Severe erosion may result when slope drains fail by overtopping, piping, or pipe separation.
  - During large storms, pipe slope drains may become clogged or over charged, forcing water around the pipe

CASQA
CALIFORNIA STORMWATER QUALITY ASSOCIATION

and causing extreme slope erosion.

- If the sectional downdrain is not sized correctly, the runoff can spill over the drain sides causing gully erosion and potential failure of the structure.

- Dissipation of high flow velocities at the pipe outlet is required to avoid downstream erosion.
- Sediment accumulation, scour depressions, and/or persistent non-stormwater discharges can result in areas of standing water suitable for mosquito production in energy dissipaters associated with slope drain outlets.

Implementation

General

The slope drain is applicable for any construction site where concentrated surface runoff can accumulate and must be conveyed down the slope in order to prevent erosion. The slope drain is effective because it prevents the stormwater from flowing directly down the slope by confining all the runoff into an enclosed pipe or channel. Due to the time lag between grading slopes and installation of permanent stormwater collection systems and slope stabilization measures, temporary provisions to intercept runoff are sometimes necessary. Particularly in steep terrain, slope drains can protect unstabilized areas from erosion.

Installation

The slope drain may be a rigid pipe, such as corrugated metal, a flexible conduit, or a lined terrace drain with the inlet placed on the top of a slope and the outlet at the bottom of the slope. This BMP typically is used in combination with a diversion control, such as an earth dike or drainage swale at the top of the slope.

The following criteria must be considered when siting slope drains.

- Permanent structures included in the project plans can often serve as construction BMPs if implemented early. However, the permanent structure must meet or exceed the criteria for the temporary structure.
- Inlet structures must be securely entrenched and compacted to avoid severe gully erosion.
- Slope drains must be securely anchored to the slope and must be adequately sized to carry the capacity of the design storm and associated forces.
- Outlets must be stabilized with riprap, concrete or other type of energy dissipator, or directed into a stable sediment trap or basin. See EC-10, Velocity Dissipation Devices.
- Debris racks are recommended at the inlet. Debris racks located several feet upstream of the inlet can usually be larger than racks at the inlet, and thus provide enhanced debris protection and less plugging.
- Safety racks are also recommended at the inlet and outlet of pipes where children or animals could become entrapped.
- Secure inlet and surround with dikes to prevent gully erosion and anchor pipe to slope.

- When using slope drains, limit drainage area to 10 acres per pipe. For larger areas, use a rock lined channel or a series of pipes.
- Size to convey at least the peak flow of a 10-year storm. The design storm is conservative due to the potential impact of system failures.
- Maximum slope generally limited to 2:1 (H:V) as energy dissipation below steeper slopes is difficult.
- Direct surface runoff to slope drains with interceptor dikes. See BMP EC-9, Earth Dikes and Drainage Swales. Top of interceptor dikes should be 12 in. higher than the top of the slope drain.
- Slope drains can be placed on or buried underneath the slope surface.
- Recommended materials include both metal and plastic pipe, either corrugated or smooth wall. Concrete pipe can also be used.
- When installing slope drains:
  - Install slope drains perpendicular to slope contours.
  - Compact soil around and under entrance, outlet, and along length of pipe.
  - Securely anchor and stabilize pipe and appurtenances into soil.
  - Check to ensure that pipe connections are watertight.
  - Protect area around inlet with filter cloth. Protect outlet with riprap or other energy dissipation device. For high energy discharges, reinforce riprap with concrete or use reinforced concrete device.
  - Protect outlet of slope drains using a flared end section when outlet discharges to a flexible energy dissipation device.
  - A flared end section installed at the inlet will improve flow into the slope drain and prevent erosion at the pipe entrance. Use a flared end section with a 6 in. minimum toe plate to help prevent undercutting. The flared section should slope towards the pipe inlet.

Design and Layout

The capacity for temporary drains should be sufficient to convey at least the peak runoff from a 10-year rainfall event. The pipe size may be computed using the Rational Method or a method established by the local municipality. Higher flows must be safely stored or routed to prevent any offsite concentration of flow and any erosion of the slope. The design storm is purposely conservative due to the potential impacts associated with system failures.

As a guide, temporary pipe slope drains should not be sized smaller than shown in the following table:

Minimum Pipe Diameter (Inches)	Maximum Drainage Area (Acres)
12	1.0
18	3.0
21	5.0
24	7.0
30	10.0

Larger drainage areas can be treated if the area can be subdivided into areas of 10 acres or less and each area is treated as a separate drainage. Drainage areas exceeding 10 acres must be designed by a Registered Civil Engineer and approved by the agency that issued the grading permit.

Materials:

Soil type, rainfall patterns, construction schedule, local requirements, and available supply are some of the factors to be considered when selecting materials. The following types of slope drains are commonly used:

- **Rigid Pipe:** This type of slope drain is also known as a pipe drop. The pipe usually consists of corrugated metal pipe or rigid plastic pipe. The pipe is placed on undisturbed or compacted soil and secured onto the slope surface or buried in a trench. Concrete thrust blocks must be used when warranted by the calculated thrust forces. Collars should be properly installed and secured with metal strappings or watertight collars.

- **Flexible Pipe**: The flexible pipe slope drain consists of a flexible tube of heavy duty plastic, rubber, or composite material. The tube material is securely anchored onto the slope surface. The tube should be securely fastened to the metal inlet and outlet conduit sections with metal strappings or watertight collars.

- **Section Downdrains**: The section downdrain consists of pre-fabricated, section conduit of half round or third round material. The sectional downdrain performs similar to a flume or chute. The pipe must be placed on undisturbed or compacted soil and secured into the slope.

- **Concrete-lined Terrace Drain:** This is a concrete channel for draining water from a terrace on a slope to the next level. These drains are typically specified as permanent structures and if installed early, can serve as slope drains during construction, which should be designed according to local drainage design criteria.

Costs

- Cost varies based on pipe selection and selected outlet protection.

Corrugated Steel Pipes, Per Foot	
Size	Supplied and Installed Cost (No Trenching Included)
12"	$19.60 per LF
15"	$22.00
18"	$26.00
24"	$32.00
30"	$50.00
PVC Pipes, Per Foot	
Size	Supplied and Installed Cost (No Trenching Included)
12"	$24.50
14"	$49.00
16"	$51.00
18"	$54.00
20"	$66.00
24"	$93.00
30"	$130.00

Inspection and Maintenance

- Inspect BMPs in accordance with General Permit requirements for the associated project type and risk level. It is recommended that at a minimum, BMPs be inspected weekly, prior to forecasted rain events, daily during extended rain events, and after the conclusion of rain events.
- Inspect BMPs subjected to non-stormwater discharges daily while non-stormwater discharges occur. Minimize areas of standing water by removing sediment blockages and filling scour depressions.
- Inspect outlet for erosion and downstream scour. If eroded, repair damage and install additional energy dissipation measures. If downstream scour is occurring, it may be necessary to reduce flows being discharged into the channel unless other preventative measures are implemented.
- Insert inlet for clogging or undercutting. Remove debris from inlet to maintain flows. Repair undercutting at inlet and if needed, install flared section or rip rap around the inlet to prevent further undercutting.
- Inspect pipes for leakage. Repair leaks and restore damaged slopes.
- Inspect slope drainage for accumulations of debris and sediment.

- Remove built up sediment from entrances and outlets as required. Flush drains if necessary; capture and settle out sediment from discharge.
- Make sure water is not ponding onto inappropriate areas (e.g., active traffic lanes, material storage areas, etc.).
- Pipe anchors must be checked to ensure that the pipe remains anchored to the slope. Install additional anchors if pipe movement is detected.

References

Draft – Sedimentation and Erosion Control, An Inventory of Current Practices, U.S.E.P.A., April 1990.

Metzger, M.E. 2004. Managing mosquitoes in stormwater treatment devices. University of California Division of Agriculture and Natural Resources, Publication 8125. On-line: http://anrcatalog.ucdavis.edu/pdf/8125.pdf

National Association of Home Builders (NAHB). Stormwater Runoff & Nonpoint Source Pollution Control Guide for Builders and Developers. National Association of Home Builders, Washington, D.C., 1995

National Management Measures to Control Nonpoint Source Pollution from Urban Areas, United States Environmental Protection Agency, 2002.

Stormwater Quality Handbooks Construction Site Best Management Practices (BMPs) Manual, State of California Department of Transportation (Caltrans), November 2000.

Stormwater Management of the Puget Sound Basin, Technical Manual, Publication #91-75, Washington State Department of Ecology, February 1992.

Water Quality Management Plan for the Lake Tahoe Region, Volume II, Handbook of Management Practices, Tahoe Regional Planning Agency, November 1988.

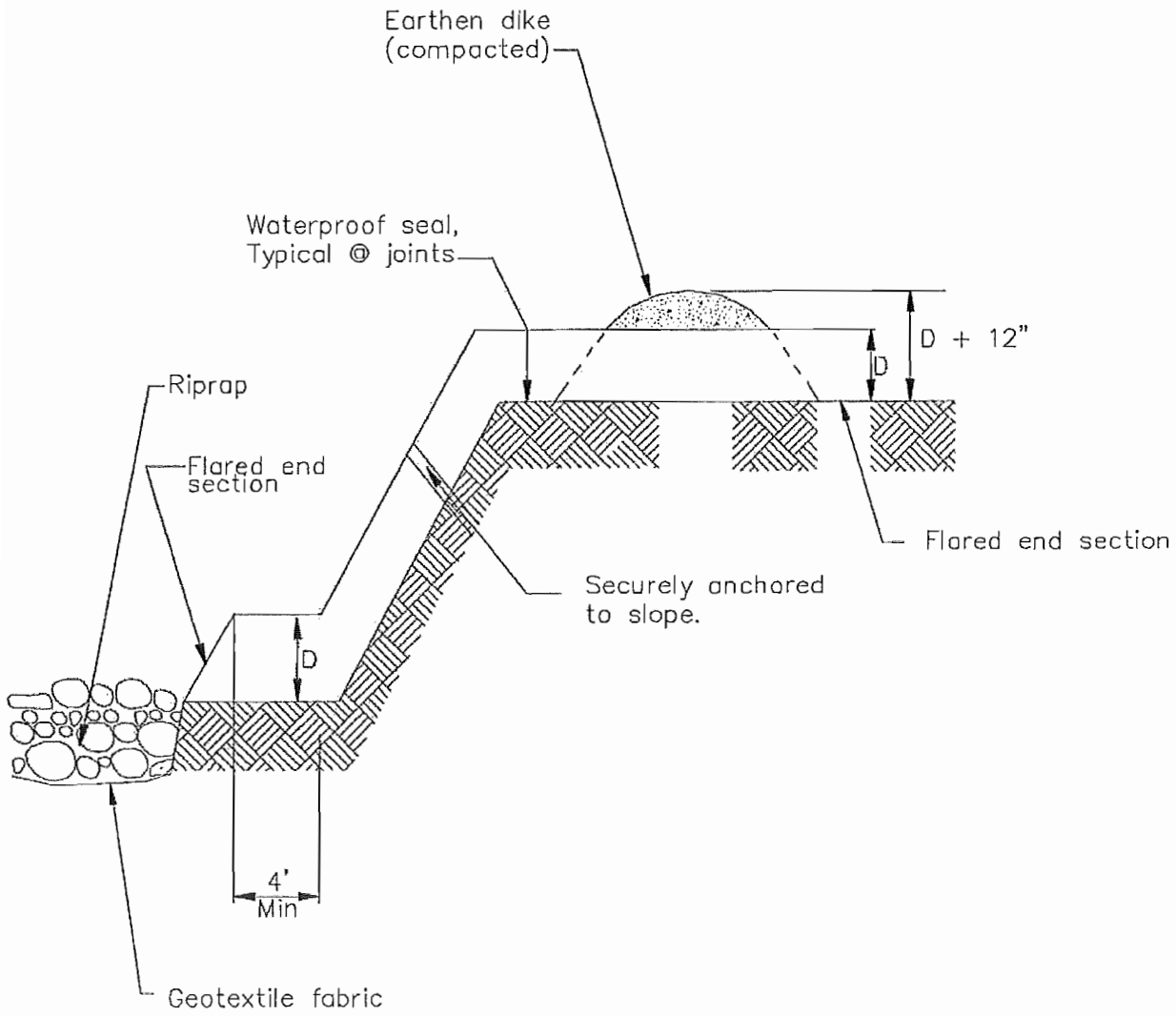

TYPICAL SLOPE DRAIN
NOT TO SCALE

Soil Preparation/Roughening EC-15

Description and Purpose

Soil Preparation/Roughening involves assessment and preparation of surface soils for BMP installation. This can include soil testing (for seed base, soil characteristics, or nutrients), as well as roughening surface soils by mechanical methods (including sheepsfoot rolling, track walking, scarifying, stair stepping, and imprinting) to prepare soil for additional BMPs, or to break up sheet flow. Soil Preparation can also involve tilling topsoil to prepare a seed bed and/or incorporation of soil amendments, to enhance vegetative establishment.

Suitable Applications

Soil preparation: Soil preparation is essential to proper vegetative establishment. In particular, soil preparation (i.e. tilling, raking, and amendment) is suitable for use in combination with any soil stabilization method, including RECPs or sod. Soil preparation should not be confused with roughening.

Roughening: Soil roughening is generally referred to as track walking (sometimes called imprinting) a slope, where treads from heavy equipment run parallel to the contours of the slope and act as mini terraces. Soil preparation is most effective when used in combination with erosion controls. Soil Roughening is suitable for use as a complementary process for controlling erosion on a site. Roughening is not intended to be used as a stand-alone BMP, and should be used with perimeter controls, additional erosion control measures, grade breaks, and vegetative establishment for maximum effectiveness. Roughening is intended to only affect surface soils and should not compromise slope stability or overall compaction. Suitable applications for soil roughening include:

Categories

EC	Erosion Control	☑
SE	Sediment Control	☒
TC	Tracking Control	
WE	Wind Erosion Control	
NS	Non-Stormwater Management Control	
WM	Waste Management and Materials Pollution Control	

Legend:

☑ **Primary Category**

☒ **Secondary Category**

Targeted Constituents

Sediment	☑
Nutrients	
Trash	
Metals	
Bacteria	
Oil and Grease	
Organics	

Potential Alternatives

EC-3 Hydraulic Mulch

EC-5 Soil Binders

EC-7 Geotextiles and Mats

CASQA
CALIFORNIA STORMWATER

- Along any disturbed slopes, including temporary stockpiles, sediment basins, or compacted soil diversion berms and swales.
- Roughening should be used in combination with hydraulically applied stabilization methods, compost blanket, or straw mulch; but should not be used in combination with RECPs or sod because roughening is intended to leave terraces on the slope.

Limitations

- Preparation and roughening must take place prior to installing other erosion controls (such as hydraulically applied stabilizers) or sediment controls (such as fiber rolls) on the faces of slopes.
- In such cases where slope preparation is minimal, erosion control/revegetation BMPs that do not require extensive soil preparation - such as hydraulic mulching and seeding applications - should be employed.
- Consideration should be given to the type of erosion control BMP that follows surface preparation, as some BMPs are not designed to be installed over various types of tillage/roughening, i.e., RECPs (erosion control blankets) should not be used with soil roughening due to a "bridging" effect, which suspends the blanket above the seed bed.
- Surface roughness has an effect on the amount of mulch material that needs to be applied, which shows up as a general increase in mulch material due to an increase in surface area (Topographic Index -see EC-3 Hydraulic Mulching).

Implementation

- Additional guidance on the comparison and selection of temporary slope stabilization methods is provided in Appendix F of the Handbook.

General

A roughened surface can significantly reduce erosion. Based on tests done at the San Diego State Erosion Research Laboratory, various roughening techniques on slopes can result in a 12 - 76% reduction in the erosion rate versus smooth slopes.

Materials

Minimal materials are required unless amendments and/or seed are added to the soil. The majority of soil roughening/preparation can be done with equipment that is on hand at a normal construction site, such as bull dozers and compaction equipment.

Installation Guidelines

Soil Preparation

- Where appropriate or feasible, soil should be prepared to receive the seed by disking or otherwise scarifying the surface to eliminate crust, improve air and water infiltration and create a more favorable environment for germination and growth.
- Based upon soil testing conducted, apply additional soil amendments (e.g. fertilizers, additional seed) to the soil to help with germination. Follow EC-4, Hydroseeding, when selecting and applying seed and fertilizers.

Cut Slope Roughening:

- Stair-step grade or groove the cut slopes that are steeper than 3:1.
- Use stair-step grading on any erodible material soft enough to be ripped with a bulldozer. Slopes consisting of soft rock with some subsoil are particularly suited to stair-step grading.
- Make the vertical cut distance less than the horizontal distance, and slightly slope the horizontal position of the "step" in toward the vertical wall.
- Do not make individual vertical cuts more than 2 feet (0.6 m) high in soft materials or more than 3 feet (0.9 m) high in rocky materials.
- Groove the slope using machinery to create a series of ridges and depressions that run across the slope, on the contour.

Fill Slope Roughening:

- Place on fill slopes with a gradient steeper than 3:1 in lifts not to exceed 8 inches (0.2 m), and make sure each lift is properly compacted.
- Ensure that the face of the slope consists of loose, uncompacted fill 4-6 inches (0.1-0.2 m) deep.
- Use grooving or tracking to roughen the face of the slopes, if necessary.
- Do not blade or scrape the final slope face.

Roughening for Slopes to be Mowed:

- Slopes which require mowing activities should not be steeper than 3:1.
- Roughen these areas to shallow grooves by track walking, scarifying, sheepsfoot rolling, or imprinting.
- Make grooves close together (less than 10 inches), and not less than 1 inch deep, and perpendicular to the direction of runoff (i.e., parallel to the slope contours).
- Excessive roughness is undesirable where mowing is planned.

Roughening With Tracked Machinery:

- Limit roughening with tracked machinery to soils with a sandy textural component to avoid undue compaction of the soil surface.
- Operate tracked machinery up and down the slope to leave horizontal depressions in the soil. Do not back-blade during the final grading operation.
- Seed and mulch roughened areas as soon as possible to obtain optimum seed germination and growth.

Costs

Costs are based on the additional labor of tracking or preparation of the slope plus the cost of any required soil amendment materials.

Inspection and Maintenance

- BMPs must be inspected in accordance with General Permit requirements for the associated project type and risk level. It is recommended that at a minimum, BMPs be inspected weekly, prior to forecasted rain events, daily during extended rain events, and after the conclusion of rain events.
- Check the seeded slopes for signs of erosion such as rills and gullies. Fill these areas slightly above the original grade, then reseed and mulch as soon as possible.
- Inspect BMPs weekly during normal operations, prior to forecasted rain events, daily during extended rain events, and after the conclusion of rain events.

References

Soil Stabilization BMP Research for Erosion and Sediment Controls: Cost Survey Technical Memorandum, State of California Department of Transportation (Caltrans), July 2007.

Erosion and Sediment Control Manual, Oregon Department of Environmental Quality, February 2005.

Non-Vegetative Stabilization EC-16

Categories		
EC	Erosion Control	☑
SE	Sediment Control	☒
TR	Tracking Control	
WE	Wind Erosion Control	☒
NS	Non-Stormwater Management Control	
WM	Waste Management and Materials Pollution Control	

Legend:
☑ **Primary Category**
☒ **Secondary Category**

Targeted Constituents	
Sediment	☑
Nutrients	
Trash	
Metals	
Bacteria	
Oil and Grease	
Organics	

Potential Alternatives

None

Description and Purpose

Non-vegetative stabilization methods are used for temporary or permanent stabilization of areas prone to erosion and should be used only where vegetative options are not feasible; examples include:

- Areas of vehicular or pedestrian traffic such as roads or paths;
- Arid environments where vegetation would not provide timely ground coverage, or would require excessive irrigation;
- Rocky substrate, infertile or droughty soils where vegetation would be difficult to establish; and
- Areas where vegetation will not grow adequately within the construction time frame.

There are several non-vegetative stabilization methods and selection should be based on site-specific conditions.

Decomposed Granite (DG) is a permanent erosion protection method that consists of a layer of stabilized decomposed granite placed over an erodible surface.

Degradable Mulches of various types (see EC-3, EC-6, EC-8) can be used for temporary non-vegetative stabilization; examples include straw mulch, compost, wood chips or hydraulic mulch.

Geotextiles and Mats can be used for temporary non-vegetative stabilization (see EC-7). These BMPs are typically manufactured

CASQA
CALIFORNIA STORMWATER QUALITY ASSOCIATION

from degradable or synthetic materials and are designed and specified based on their functional longevity, i.e., how long they will persist and provide erosion protection. All geotextiles and mats should be replaced when they exceed their functional longevity or when permanent stabilization methods are instituted.

Gravel Mulch is a non-degradable erosion control product that is composed of washed and screened coarse to very coarse gravel, 16 mm to 64 mm (0.6" - 2.5"), similar to an AASHTO No. 3 coarse aggregate.

Rock Slope Protection consists of utilizing large rock or rip-rap (4"- 24") to stabilize slopes with a high erosion potential and those subject to scour along waterways.

Soil Binders can be used for temporary non-vegetative stabilization (see EC-5). The key to their use is functional longevity. In most cases, the soil binder will need to be routinely monitored and re-applied to maintain an erosion-resistant coverage.

Suitable Applications

Non-vegetated stabilization methods are suitable for use on disturbed soil areas and on material stockpiles that need to be temporarily or permanently protected from erosion by water and wind. Non-vegetated stabilization should only be utilized when vegetation cannot be established in the required timeframe, due to soil or climactic conditions, or where vegetation may be a potential fire hazard.

Decomposed Granite (DG) and Gravel Mulch are suitable for use in areas where vegetation establishment is difficult, on flat surfaces, trails and pathways, and when used in conjunction with a stabilizer or tackifier, on shallow slopes (i.e., 10:1 [H:V]). DG and gravel can also be used on shallow rocky slopes where vegetation cannot be established for permanent erosion control.

Degradable Mulches can be used to cover and protect soil surfaces from erosion both in temporary and permanent applications. In many cases, the use of mulches by themselves requires routine inspection and re-application. See EC-3 Hydraulic Mulch, EC-6 Straw Mulch, EC-8 Wood Mulch, or EC-14 Compost Blankets for more information.

Geotextiles and Mats can be used as a temporary stand-alone soil stabilization method. Depending on material selection, geotextiles and mats can be a short-term (3 mos – 1 year) or long-term (1-2 years) temporary stabilization method. For more information on geotextiles and mats see EC-7 Geotextiles and Mats.

Rock Slope Protection can be used when the slopes are subject to scour or have a high erosion potential, such as slopes adjacent to flowing waterways or slopes subject to overflow from detention facilities (spillways).

Soil Binders can be used for temporary stabilization of stockpiles and disturbed areas not subject to heavy traffic. See EC-5 Soil Binders for more information.

Limitations

General

- Refer to EC-3, EC-6, EC-8, and EC-14 for limitations on use of mulches. Refer to EC-7 for limitations on use of geotextiles and mats. Refer to EC-5 for limitations on use of Soil Binders.

Decomposed Granite

- Not available in some geographic regions.
- If not tackified, material may be susceptible to erosion even on slight slopes (e.g., 30:1 [H:V]).
- Installed costs may be more expensive than vegetative stabilization methods.

Gravel Mulch

- Availability is limited in some geographic regions.
- If not properly screened and washed, can contain fine material that can erode and/or create dust problems.
- If inadequately sized, material may be susceptible to erosion on sloped areas.
- Pore spaces fill with dirt and debris over time; may provide a growing medium for weeds.

Rock Slope Protection

- Installation is labor intensive.
- Installed costs can be significantly higher than vegetative stabilization methods.
- Rounded stones may not be used on slopes greater than 2:1 [H:V].

Implementation

General

Non-vegetated stabilization should be used in accordance with the following general guidance:

- Should be used in conjunction with other BMPs, including drainage, erosion controls and sediment controls.
- Refer to EC-3, EC-6, EC-8, and EC-14 for implementation details for mulches. Refer to EC-7 for implementation details for geotextiles and mats. Refer to EC-5 for implementation details for soil binders.
- Non-vegetated stabilization measures should be implemented as soon as the disturbance in the areas they are intended to protect has ceased.
- Additional guidance on the comparison and selection of temporary slope stabilization methods is provided in Appendix F of the Handbook.

Decomposed Granite Stabilization

- If used for a road or path should be installed on a prepared base.

- Should be mixed with a stabilizer if used for roads or pathways, or on slope applications.
- Though porous it is recommended to prevent standing water on or next to a decomposed granite road or pathway.

Gravel Mulch

- Should be sized based on slope, rainfall, and upgradient run-on conditions. Stone size should be increased as potential for erosion increases (steeper slopes, high intensity rainfall).
- If permanent, a weed control fabric should be placed prior to installation.
- Should be installed at a minimum 2" depth.
- Should completely cover all exposed surfaces.

Rock Slope Protection

- Rock slope protection installation should follow Caltrans Standard Specification 72-2: Rock Slope Protection. Refer to the specification for rock conformity requirements and installation methods.
- When using rock slope protection, rock size and installation method should be specified by an Engineer.
- A geotextile fabric should be placed prior to installation.

Costs

- Costs are highly variable depending not only on technique chosen, but also on materials chosen within specific techniques. In addition, availability of certain materials will vary by region/location, which will also affect the cost. Costs of mulches, geotextiles and mats, and soil binders are presented in their respective fact sheets. Costs for decomposed granite, gravel mulch stabilization and rock slope protection may be higher depending on location and availability of materials. Caltrans has provided an estimate for gravel mulch of \$10 - \$15/yd^2 in flat areas and \$11 - \$23/yd^2 on side slopes.

Inspection and Maintenance

General

- BMPs must be inspected in accordance with General Permit requirements for the associated project type and risk level. It is recommended that at a minimum, BMPs be inspected weekly, prior to forecasted rain events, daily during extended rain events, and after the conclusion of rain events.
- For permanent installation, require inspection periodically and after major storm events to look for signs of erosion or damage to the stabilization.
- All damage should be repaired immediately.
- Refer to EC-3, EC-6, EC-8, and EC-14 for inspection and maintenance requirements for mulches. Refer to EC-7 for inspection and maintenance requirements for geotextiles and mats. Refer to EC-5 for inspection and maintenance requirements for soil binders.

Decomposed Granite and Gravel Mulch Stabilization

- Rake out and add decomposed granite or gravel as needed to areas subject to rill erosion. Inspect upgradient drainage controls and repair/modify as necessary.
- Should remain stable under loose surface material. Any significant problem areas should be repaired to restore uniformity to the installation.

References

Arid Zone Forestry: A Guide for Field Technicians. Food and Agriculture Organization of the United Nations, 1989.

Design of Roadside Channels with Flexible Linings, Hydraulic Engineering Circular Number 15, Third Edition, Federal Highway Administration, 2007.

Design Standards for Urban Infrastructure - Soft Landscape Design, Department of Territory and Municipal Services - Australian Capital Territory http://www.tams.act.gov.au/work/standards_and_procedures/design_standards_for_urban_infrastructure

Erosion and Sediment Control Handbook: A Guide for Protection of State Waters through the use of Best Management Practices during Land Disturbing Activities, Tennessee Department of Environment and Conservation, 2002.

Gravel Mulch, Landscape Architecture Non-Standard Specification 10-2, California Department of Transportation (Caltrans), http://www.dot.ca.gov/hq/LandArch/roadside/detail-gm.htm

Maine Erosion and Sediment Control BMPs, DEPLW0588, Maine Department of Environmental Protection: Bureau of Land and Water Quality, 2003.

National Menu of Best Management Practices, US Environmental Protection Agency, 2006.

Standard Specification 72-2: Rock Slope Protection. California Department of Transportation, 2006.

Stormwater Quality Handbooks Construction Site Best Management Practices (BMPs) Manual, State of California Department of Transportation (Caltrans), March 2003.

Silt Fence

SE-1

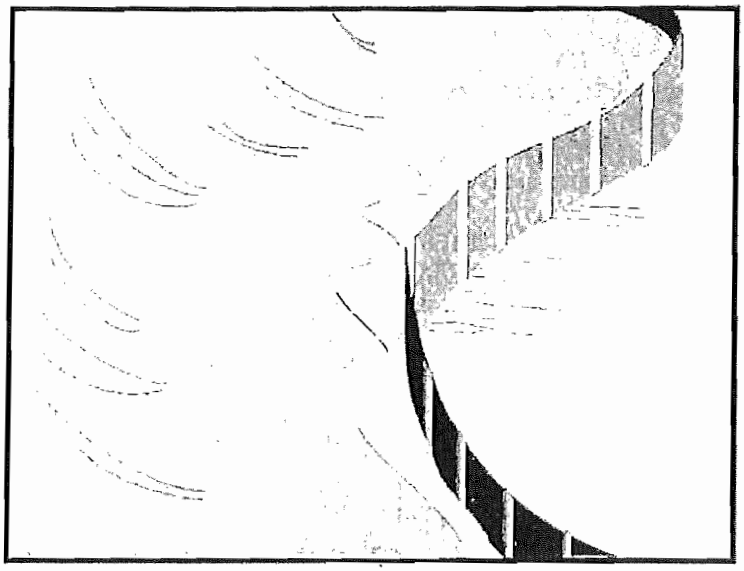

Categories

EC	Erosion Control	
SE	Sediment Control	☑
TC	Tracking Control	
WE	Wind Erosion Control	
NS	Non-Stormwater Management Control	
WM	Waste Management and Materials Pollution Control	

Legend:

☑ **Primary Category**

☒ **Secondary Category**

Targeted Constituents

Sediment	☑
Nutrients	
Trash	
Metals	
Bacteria	
Oil and Grease	
Organics	

Potential Alternatives

SE-5 Fiber Rolls

SE-6 Gravel Bag Berm

SE-8 Sandbag Barrier

SE-10 Storm Drain Inlet Protection

SE-12 Temporary Silt Dike

SE-14 Biofilter Bags

Description and Purpose

A silt fence is made of a woven geotextile that has been entrenched, attached to supporting poles, and sometimes backed by a plastic or wire mesh for support. The silt fence detains sediment-laden water, promoting sedimentation behind the fence.

Suitable Applications

Silt fences are suitable for perimeter control, placed below areas where sheet flows discharge from the site. They could also be used as interior controls below disturbed areas where runoff may occur in the form of sheet and rill erosion and around inlets within disturbed areas (SE-10). Silt fences are generally ineffective in locations where the flow is concentrated and are only applicable for sheet or overland flows. Silt fences are most effective when used in combination with erosion controls. Suitable applications include:

- Along the perimeter of a project.
- Below the toe or down slope of exposed and erodible slopes.
- Along streams and channels.
- Around temporary spoil areas and stockpiles.
- Around inlets.
- Below other small cleared areas.

CASQA

CALIFORNIA STORMWATER

Limitations

- Do not use in streams, channels, drain inlets, or anywhere flow is concentrated.
- Do not use in locations where ponded water may cause a flooding hazard. Runoff typically ponds temporarily on the upstream side of silt fence.
- Do not use silt fence to divert water flows or place across any contour line. Fences not constructed on a level contour, or fences used to divert flow will concentrate flows resulting in additional erosion and possibly overtopping or failure of the silt fence.
- Improperly installed fences are subject to failure from undercutting, overtopping, or collapsing.
- Not effective unless trenched and keyed in.
- Not intended for use as mid-slope protection on slopes greater than 4:1 (H:V).
- Do not use on slopes subject to creeping, slumping, or landslides.

Implementation

General

A silt fence is a temporary sediment barrier consisting of woven geotextile stretched across and attached to supporting posts, trenched-in, and, depending upon the strength of fabric used, supported with plastic or wire mesh fence. Silt fences trap sediment by intercepting and detaining small amounts of sediment-laden runoff from disturbed areas in order to promote sedimentation behind the fence.

The following layout and installation guidance can improve performance and should be followed:

- Use principally in areas where sheet flow occurs.
- Install along a level contour, so water does not pond more than 1.5 ft at any point along the silt fence.
- The maximum length of slope draining to any point along the silt fence should be 200 ft or less.
- The maximum slope perpendicular to the fence line should be 1:1.
- Provide sufficient room for runoff to pond behind the fence and to allow sediment removal equipment to pass between the silt fence and toes of slopes or other obstructions. About 1200 ft^2 of ponding area should be provided for every acre draining to the fence.
- Turn the ends of the filter fence uphill to prevent stormwater from flowing around the fence.
- Leave an undisturbed or stabilized area immediately down slope from the fence where feasible.

- Silt fences should remain in place until the disturbed area is permanently stabilized, after which, the silt fence should be removed and properly disposed.
- Silt fence should be used in combination with erosion source controls up slope in order to provide the most effective sediment control.
- Be aware of local regulations regarding the type and installation requirements of silt fence, which may differ from those presented in this fact sheet.

Design and Layout

The fence should be supported by a plastic or wire mesh if the fabric selected does not have sufficient strength and bursting strength characteristics for the planned application (as recommended by the fabric manufacturer). Woven geotextile material should contain ultraviolet inhibitors and stabilizers to provide a minimum of six months of expected usable construction life at a temperature range of 0 °F to 120 °F.

- Layout in accordance with attached figures.
- For slopes steeper than 2:1 (H:V) and that contain a high number of rocks or large dirt clods that tend to dislodge, it may be necessary to install additional protection immediately adjacent to the bottom of the slope, prior to installing silt fence. Additional protection may be a chain link fence or a cable fence.
- For slopes adjacent to sensitive receiving waters or Environmentally Sensitive Areas (ESAs), silt fence should be used in conjunction with erosion control BMPs.

Standard vs. Heavy Duty Silt Fence

Standard Silt Fence

- Generally applicable in cases where the slope of area draining to the silt fence is 4:1 (H:V) or less.
- Used for shorter durations, typically 5 months or less
- Area draining to fence produces moderate sediment loads.

Heavy Duty Silt Fence

- Use is generally limited to 8 months or less.
- Area draining to fence produces moderate sediment loads.
- Heavy duty silt fence usually has 1 or more of the following characteristics, not possessed by standard silt fence.
  - Fence fabric has higher tensile strength.
  - Fabric is reinforced with wire backing or additional support.
  - Posts are spaced closer than pre-manufactured, standard silt fence products.
  - Posts are metal (steel or aluminum)

Materials

Standard Silt Fence

- Silt fence material should be woven geotextile with a minimum width of 36 in. and a minimum tensile strength of 100 lb force. The fabric should conform to the requirements in ASTM designation D4632 and should have an integral reinforcement layer. The

reinforcement layer should be a polypropylene, or equivalent, net provided by the manufacturer. The permittivity of the fabric should be between 0.1 sec^{-1} and 0.15 sec^{-1} in conformance with the requirements in ASTM designation D4491.

- Wood stakes should be commercial quality lumber of the size and shape shown on the plans. Each stake should be free from decay, splits or cracks longer than the thickness of the stake or other defects that would weaken the stakes and cause the stakes to be structurally unsuitable.

- Staples used to fasten the fence fabric to the stakes should be not less than 1.75 in. long and should be fabricated from 15 gauge or heavier wire. The wire used to fasten the tops of the stakes together when joining two sections of fence should be 9 gauge or heavier wire. Galvanizing of the fastening wire will not be required.

Heavy-Duty Silt Fence

- Some silt fence has a wire backing to provide additional support, and there are products that may use prefabricated plastic holders for the silt fence and use metal posts or bar reinforcement instead of wood stakes. If bar reinforcement is used in lieu of wood stakes, use number four or greater bar. Provide end protection for any exposed bar reinforcement for health and safety purposes.

Installation Guidelines – Traditional Method

Silt fences are to be constructed on a level contour. Sufficient area should exist behind the fence for ponding to occur without flooding or overtopping the fence.

- A trench should be excavated approximately 6 in. wide and 6 in. deep along the line of the proposed silt fence (trenches should not be excavated wider or deeper than necessary for proper silt fence installation).

- Bottom of the silt fence should be keyed-in a minimum of 12 in.

- Posts should be spaced a maximum of 6 ft apart and driven securely into the ground a minimum of 18 in. or 12 in. below the bottom of the trench.

- When standard strength geotextile is used, a plastic or wire mesh support fence should be fastened securely to the upslope side of posts using heavy–duty wire staples at least 1 in. long. The mesh should extend into the trench.

- When extra-strength geotextile and closer post spacing are used, the mesh support fence may be eliminated.

- Woven geotextile should be purchased in a long roll, then cut to the length of the barrier. When joints are necessary, geotextile should be spliced together only at a support post, with a minimum 6 in. overlap and both ends securely fastened to the post.

- The trench should be backfilled with native material and compacted.

- Construct silt fences with a setback of at least 3 ft from the toe of a slope. Where, due to specific site conditions, a 3 ft setback is not available, the silt fence may be constructed at the

toe of the slope, but should be constructed as far from the toe of the slope as practicable. Silt fences close to the toe of the slope will be less effective and more difficult to maintain.

- Construct the length of each reach so that the change in base elevation along the reach does not exceed 1/3 the height of the barrier; in no case should the reach exceed 500 ft.
- Cross barriers should be a minimum of $^1/_3$ and a maximum of ½ the height of the linear barrier.
- See typical installation details at the end of this fact sheet.

Installation Guidelines - Static Slicing Method

- Static Slicing is defined as insertion of a narrow blade pulled behind a tractor, similar to a plow blade, at least 10 inches into the soil while at the same time pulling silt geotextile fabric into the ground through the opening created by the blade to the depth of the blade. Once the gerotextile is installed, the soil is compacted using tractor tires.
- This method will not work with pre-fabricated, wire backed silt fence.
- Benefits:
    - Ease of installation (most often done with a 2 person crew). In addition, installation using static slicing has been found to be more efficient on slopes, in rocky soils, and in saturated soils.
    - Minimal soil disturbance.
    - Greater level of compaction along fence, leading to higher performance (i.e. greater sediment retention).
    - Uniform installation.
    - Less susceptible to undercutting/undermining.

Costs

- It should be noted that costs vary greatly across regions due to available supplies and labor costs.
- Average annual cost for installation using the traditional silt fence installation method (assumes 6 month useful life) is $7 per linear foot based on vendor research. Range of cost is $3.50 - $9.10 per linear foot.
- In tests, the slicing method required 0.33 man hours per 100 linear feet, while the trenched based systems required as much as 1.01 man hours per linear foot.

Inspection and Maintenance

- BMPs must be inspected in accordance with General Permit requirements for the associated project type and risk level. It is recommended that at a minimum, BMPs be inspected weekly, prior to forecasted rain events, daily during extended rain events, and after the conclusion of rain events.
- Repair undercut silt fences.

- Repair or replace split, torn, slumping, or weathered fabric. The lifespan of silt fence fabric is generally 5 to 8 months.
- Silt fences that are damaged and become unsuitable for the intended purpose should be removed from the site of work, disposed, and replaced with new silt fence barriers.
- Sediment that accumulates in the BMP should be periodically removed in order to maintain BMP effectiveness. Sediment should be removed when the sediment accumulation reaches one-third of the barrier height.
- Silt fences should be left in place until the upstream area is permanently stabilized. Until then, the silt fence should be inspected and maintained regularly.
- Remove silt fence when upgradient areas are stabilized. Fill and compact post holes and anchor trench, remove sediment accumulation, grade fence alignment to blend with adjacent ground, and stabilize disturbed area.

References

Manual of Standards of Erosion and Sediment Control Measures, Association of Bay Area Governments, May 1995.

National Management Measures to Control Nonpoint Source Pollution from Urban Areas, United States Environmental Protection Agency, 2002.

Proposed Guidance Specifying Management Measures for Sources of Nonpoint Pollution in Coastal Waters, Work Group-Working Paper, USEPA, April 1992.

Sedimentation and Erosion Control Practices, and Inventory of Current Practices (Draft), UESPA, 1990.

Southeastern Wisconsin Regional Planning Commission (SWRPC). Costs of Urban Nonpoint Source Water Pollution Control Measures. Technical Report No. 31. Southeastern Wisconsin Regional Planning Commission, Waukesha, WI. 1991

Stormwater Quality Handbooks - Construction Site Best Management Practices (BMPs) Manual, State of California Department of Transportation (Caltrans), March 2003.

Stormwater Management Manual for The Puget Sound Basin, Washington State Department of Ecology, Public Review Draft, 1991.

U.S. Environmental Protection Agency (USEPA). Stormwater Management for Industrial Activities: Developing Pollution Prevention Plans and Best Management Practices. U.S. Environmental Protection Agency, Office of Water, Washington, DC, 1992.

Water Quality Management Plan for the Lake Tahoe Region, Volume II, Handbook of Management Practices, Tahoe Regional Planning Agency, November 1988.Soil Stabilization BMP Research for Erosion and Sediment Controls: Cost Survey Technical Memorandum, State of California Department of Transportation (Caltrans), July 2007.

Erosion and Sediment Control Manual, Oregon Department of Environmental Quality, February 2005.

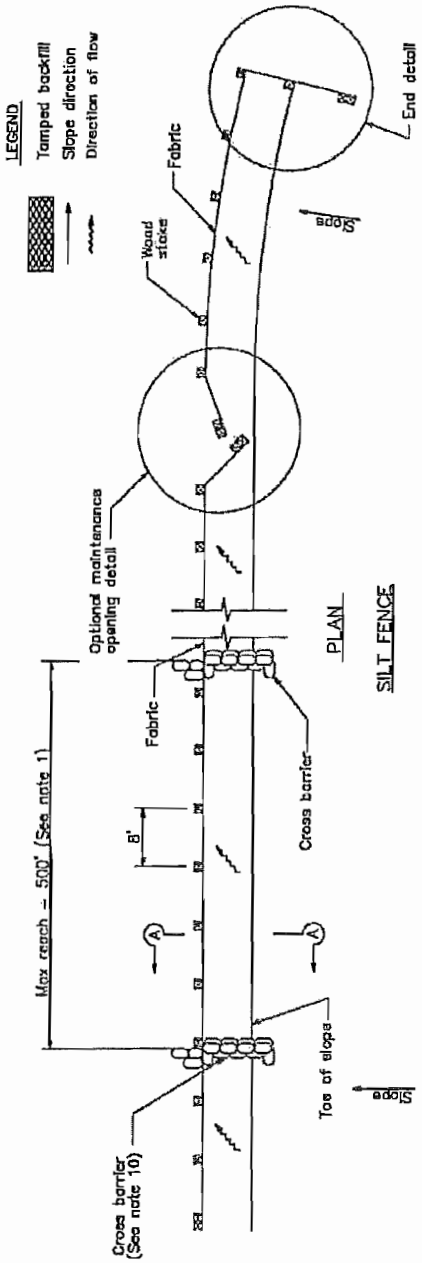

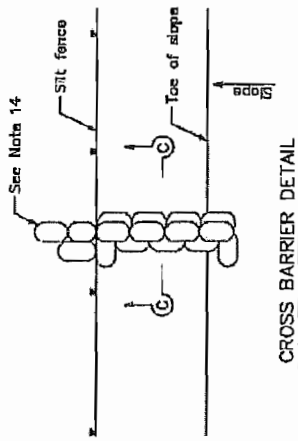

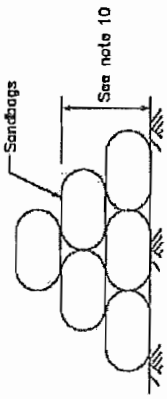

NOTES

1. Construct the length of each reach so that the change in base elevation along the reach does not exceed 1/3 the height of the linear barrier, in no case shall the reach length exceed 500'.
2. The last 8'–0" of fence shall be turned up slope.
3. Stake dimensions are nominal.
4. Dimension may vary to fit field condition.
5. Stakes shall be spaced at 8'–0" maximum and shall be positioned on downstream side of fence.
6. Stakes to overlap and fence fabric to fold around each stake one full turn. Secure fabric to stake with 4 staples.
7. Stakes shall be driven tightly together to prevent potential flow–through of sediment at joint. The tops of the stakes shall be secured with wire.
8. For end stake, fence fabric shall be folded around two stakes one full turn and secured with 4 staples.
9. Minimum 4 staples per stake. Dimensions shown are typical.
10. Cross barriers shall be a minimum of 1/3 and a maximum of 1/2 the height of the linear barrier.
11. Maintenance openings shall be constructed in a manner to ensure sediment remains behind silt fence.
12. Joining sections shall not be placed at sump locations.
13. Sandbag rows and layers shall be offset to eliminate gaps.
14. Add 3–4 bags to cross barrier on downgradient side of silt fence as needed to prevent bypass or undermining and as allowable based on site limits of disturbance.

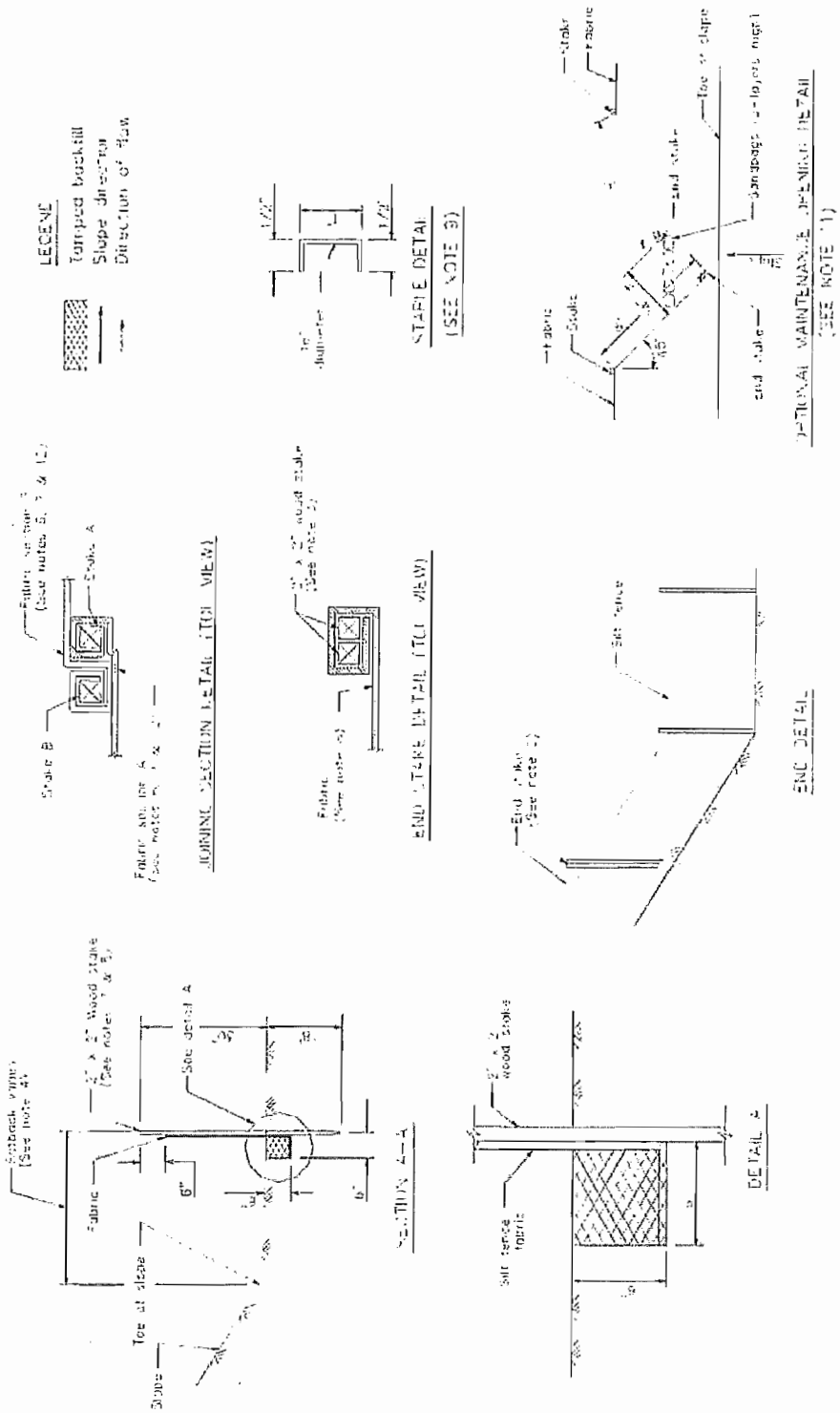
LEGEND
Tamped backfill
Slope direction
Direction of flow
STAPLE DETAIL
(SEE NOTE 3)
END STAKE DETAIL (TOP VIEW)
END DETAIL
DETAIL B
Stake B
Stake A
Fabric
Silt fence
Wood stake
Toe of slope
Slope

Sediment Trap SE-3

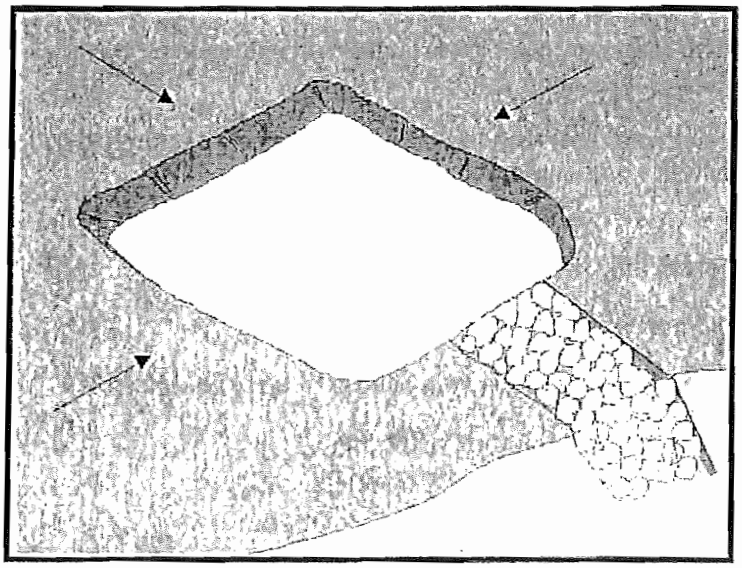

Categories		
EC	Erosion Control	
SE	Sediment Control	☑
TC	Tracking Control	
WE	Wind Erosion Control	
NS	Non-Stormwater Management Control	
WM	Waste Management and Materials Pollution Control	

Legend:

☑ **Primary Objective**

☒ **Secondary Objective**

Targeted Constituents	
Sediment	☑
Nutrients	
Trash	☑
Metals	
Bacteria	
Oil and Grease	
Organics	

Potential Alternatives

SE-2 Sediment Basin (for larger areas)

Description and Purpose

A sediment trap is a containment area where sediment-laden runoff is temporarily detained under quiescent conditions, allowing sediment to settle out or before the runoff is discharged by gravity flow. Sediment traps are formed by excavating or constructing an earthen embankment across a waterway or low drainage area.

Trap design guidance provided in this fact sheet is not intended to guarantee compliance with numeric discharge limits (numeric action levels or numeric effluent limits for turbidity). Compliance with discharge limits requires a thoughtful approach to comprehensive BMP planning, implementation, and maintenance. Therefore, optimally designed and maintained sediment traps should be used in conjunction with a comprehensive system of BMPs.

Suitable Applications

Sediment traps should be considered for use:

- At the perimeter of the site at locations where sediment-laden runoff is discharged offsite.
- At multiple locations within the project site where sediment control is needed.
- Around or upslope from storm drain inlet protection measures.
- Sediment traps may be used on construction projects where the drainage area is less than 5 acres. Traps would be

CASQA
CALIFORNIA STORMWATER QUALITY ASSOCIATION

placed where sediment-laden stormwater may enter a storm drain or watercourse. SE-2, Sediment Basins, must be used for drainage areas greater than 5 acres.

- As a supplemental control, sediment traps provide additional protection for a water body or for reducing sediment before it enters a drainage system.

Limitations

- Requires large surface areas to permit infiltration and settling of sediment.
- Not appropriate for drainage areas greater than 5 acres.
- Only removes large and medium sized particles and requires upstream erosion control.
- Attractive and dangerous to children, requiring protective fencing.
- Conducive to vector production.
- Should not be located in live streams.

Implementation

Design

A sediment trap is a small temporary ponding area, usually with a gravel outlet, formed by excavation or by construction of an earthen embankment. Its purpose is to collect and store sediment from sites cleared or graded during construction. It is intended for use on small drainage areas with no unusual drainage features and projected for a quick build-out time. It should help in removing coarse sediment from runoff. The trap is a temporary measure with a design life of approximately six months to one year and is to be maintained until the site area is permanently protected against erosion by vegetation and/or structures.

Sediment traps should be used only for small drainage areas. If the contributing drainage area is greater than 5 acres, refer to SE-2, Sediment Basins, or subdivide the catchment area into smaller drainage basins.

Sediment usually must be removed from the trap after each rainfall event. The SWPPP should detail how this sediment is to be disposed, such as in fill areas onsite, or removal to an approved offsite dump. Sediment traps used as perimeter controls should be installed before any land disturbance takes place in the drainage area.

Sediment traps are usually small enough that a failure of the structure would not result in a loss of life, damage to home or buildings, or interruption in the use of public roads or utilities. However, sediment traps are attractive to children and can be dangerous. The following recommendations should be implemented to reduce risks:

- Install continuous fencing around the sediment trap or pond. Consult local ordinances regarding requirements for maintaining health and safety.
- Restrict basin side slopes to 3:1 or flatter.

Sediment trap size depends on the type of soil, size of the drainage area, and desired sediment removal efficiency (see SE-2, Sediment Basin). As a rule of thumb, the larger the basin volume

the greater the sediment removal efficiency. Sizing criteria are typically established under the local grading ordinance or equivalent. The runoff volume from a 2-year storm is a common design criteria for a sediment trap. The sizing criteria below assume that this runoff volume is 0.042 acre-ft/acre (0.5 in. of runoff). While the climatic, topographic, and soil type extremes make it difficult to establish a statewide standard, the following criteria should trap moderate to high amounts of sediment in most areas of California:

- Locate sediment traps as near as practical to areas producing the sediment.
- Trap should be situated according to the following criteria: (1) by excavating a suitable area or where a low embankment can be constructed across a swale, (2) where failure would not cause loss of life or property damage, and (3) to provide access for maintenance, including sediment removal and sediment stockpiling in a protected area.
- Trap should be sized to accommodate a settling zone and sediment storage zone with recommended minimum volumes of 67 yd^3/acre and 33 yd^3/acre of contributing drainage area, respectively, based on 0.5 in. of runoff volume over a 24-hour period. In many cases, the size of an individual trap is limited by available space. Multiple traps or additional volume may be required to accommodate specific rainfall, soil, and site conditions.
- Traps with an impounding levee greater than 4.5 ft tall, measured from the lowest point to the impounding area to the highest point of the levee, and traps capable of impounding more than 35,000 ft^3, should be designed by a Registered Civil Engineer. The design should include maintenance requirements, including sediment and vegetation removal, to ensure continuous function of the trap outlet and bypass structures.
- The outlet pipe or open spillway must be designed to convey anticipated peak flows.
- Use rock or vegetation to protect the trap outlets against erosion.
- Fencing should be provided to prevent unauthorized entry.

Installation

Sediment traps can be constructed by excavating a depression in the ground or creating an impoundment with a small embankment. Sediment traps should be installed outside the area being graded and should be built prior to the start of the grading activities or removal of vegetation. To minimize the area disturbed by them, sediment traps should be installed in natural depressions or in small swales or drainage ways. The following steps must be followed during installation:

- The area under the embankment must be cleared, grubbed, and stripped of any vegetation and root mat. The pool area should be cleared.
- The fill material for the embankment must be free of roots or other woody vegetation as well as oversized stones, rocks, organic material, or other objectionable material. The embankment may be compacted by traversing with equipment while it is being constructed.
- All cut-and-fill slopes should be 3:1 or flatter.
- When a riser is used, all pipe joints must be watertight.

- When a riser is used, at least the top two-thirds of the riser should be perforated with 0.5 in. diameter holes spaced 8 in. vertically and 10 to 12 in. horizontally. See SE-2, Sediment Basin.
- When an earth or stone outlet is used, the outlet crest elevation should be at least 1 ft below the top of the embankment.
- When crushed stone outlet is used, the crushed stone used in the outlet should meet AASHTO M43, size No. 2 or 24, or its equivalent such as MSHA No. 2. Gravel meeting the above gradation may be used if crushed stone is not available.

Costs

Average annual cost per installation and maintenance (18 month useful life) is $0.73 per ft^3 ($1,300 per drainage acre). Maintenance costs are approximately 20% of installation costs.

Inspection and Maintenance

- Inspect BMPs in accordance with General Permit requirements for the associated project type and risk level. It is recommended that at a minimum, BMPs be inspected weekly, prior to forecasted rain events, daily during extended rain events, and after the conclusion of rain events.
- Inspect outlet area for erosion and stabilize if required.
- Inspect trap banks for seepage and structural soundness, repair as needed.
- Inspect outlet structure and spillway for any damage or obstructions. Repair damage and remove obstructions as needed.
- Inspect fencing for damage and repair as needed.
- Inspect the sediment trap for area of standing water during every visit. Corrective measures should be taken if the BMP does not dewater completely in 96 hours or less to prevent vector production.
- Sediment that accumulates in the BMP must be periodically removed in order to maintain BMP effectiveness. Sediment should be removed when the sediment accumulation reaches one-third of the trap capacity. Sediment removed during maintenance may be incorporated into earthwork on the site or disposed of at an appropriate location.
- Remove vegetation from the sediment trap when first detected to prevent pools of standing water and subsequent vector production.
- BMPs that require dewatering shall be continuously attended while dewatering takes place. Dewatering BMPs per NS-2 shall be implemented at all times during dewatering activities.

References

Brown, W., and T. Schueler. The Economics of Stormwater BMPs in the Mid-Atlantic Region. Prepared for Chesapeake Research Consortium, Edgewater, MD, by the Center for Watershed Protection, Ellicott City, MD, 1997.

Draft – Sedimentation and Erosion Control, an Inventory of Current Practices, USEPA, April 1990.

Manual of Standards of Erosion and Sediment Control Measures, Association of Bay Area Governments, May 1995.

Metzger, M.E., D.F. Messer, C.L. Beitia, C.M. Myers, and V.L. Kramer, The Dark Side of Stormwater Runoff Management: Disease Vectors Associated with Structural BMPs, 2002.

National Management Measures to Control Nonpoint Source Pollution from Urban Areas, United States Environmental Protection Agency, 2002.

Proposed Guidance Specifying Management Measures for Sources of Nonpoint Pollution in Coastal Waters, Work Group-Working Paper, USEPA, April 1992.

Stormwater Quality Handbooks - Construction Site Best Management Practices (BMPs) Manual, State of California Department of Transportation (Caltrans), November 2000.

Stormwater Management Manual for The Puget Sound Basin, Washington State Department of Ecology, Public Review Draft, 1991.

U.S. Environmental Protection Agency (USEPA). Guidance Specifying Management Measures for Nonpoint Pollution in Coastal Waters. EPA 840-B-9-002. U.S. Environmental Protection Agency, Office of Water, Washington, DC, 1993.

Water Quality Management Plan for the Lake Tahoe Region, Volume II, Handbook of Management Practices, Tahoe Regional Planning Agency, November 1988.

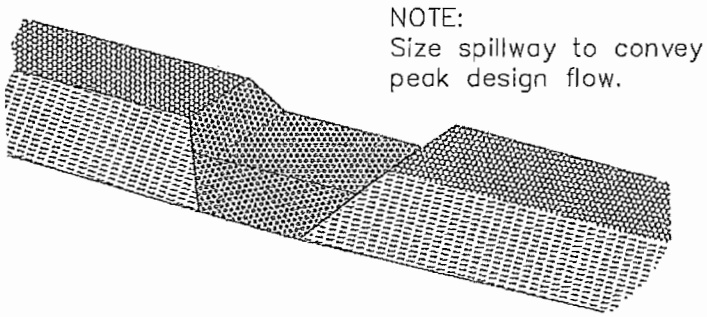

TYPICAL OPEN SPILLWAY

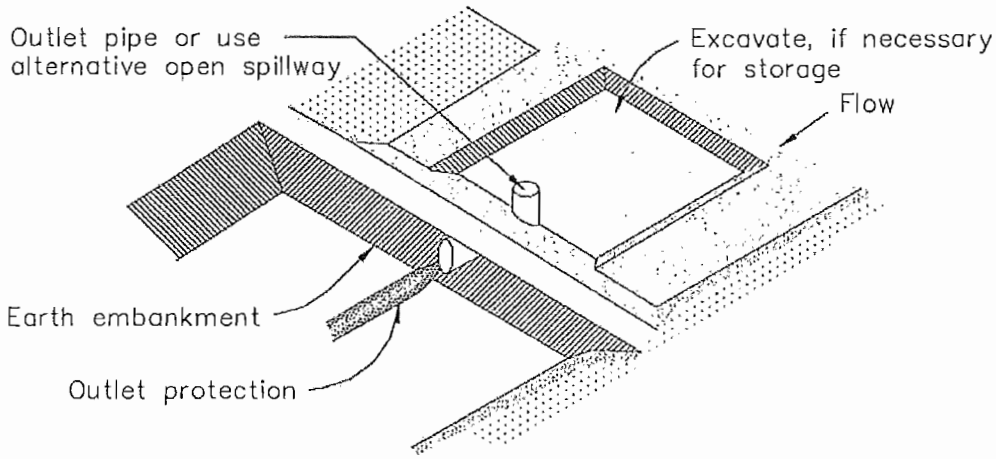

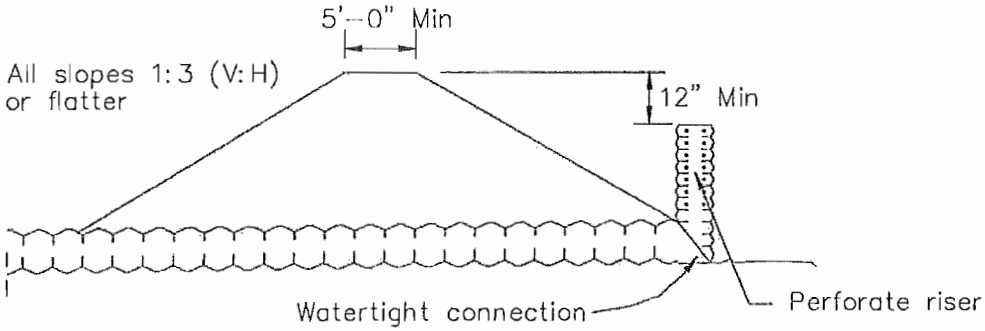

EMBANKMENT SECTION THRU RISER

TYPICAL SEDIMENT TRAP
NOT TO SCALE

Check Dams SE-4

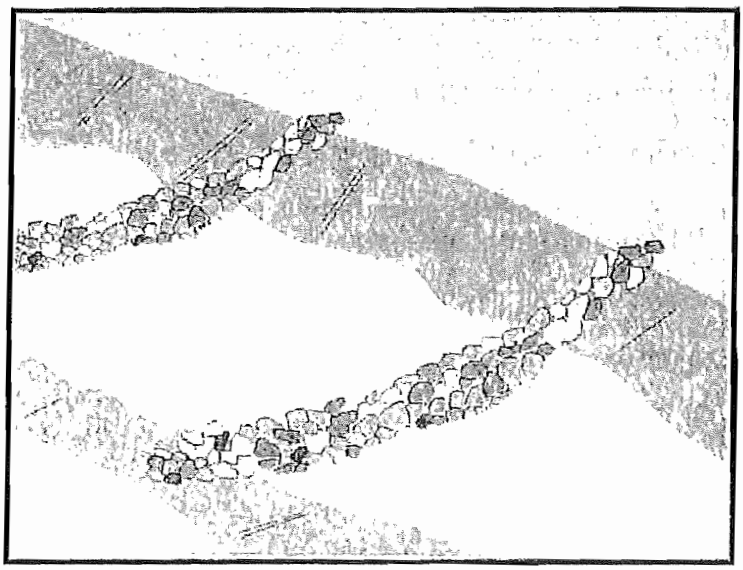

Categories		
EC	Erosion Control	☒
SE	Sediment Control	☑
TC	Tracking Control	
WE	Wind Erosion Control	
NS	Non-Stormwater Management Control	
WM	Waste Management and Materials Pollution Control	

Legend:

☑ **Primary Category**

☒ **Secondary Category**

Targeted Constituents	
Sediment	☑
Nutrients	
Trash	
Metals	
Bacteria	
Oil and Grease	
Organics	

Potential Alternatives

SE-5 Fiber Rolls

SE-6 Gravel Bag Berm

SE-8 Sandbag Barrier

SE-12 Temporary Silt Dike

SE-14 Biofilter Bags

Description and Purpose

A check dam is a small barrier constructed of rock, gravel bags, sandbags, fiber rolls, or other proprietary products, placed across a constructed swale or drainage ditch. Check dams reduce the effective slope of the channel, thereby reducing scour and channel erosion by reducing flow velocity and increasing residence time within the channel, allowing sediment to settle.

Suitable Applications

Check dams may be appropriate in the following situations:

- To promote sedimentation behind the dam.
- To prevent erosion by reducing the velocity of channel flow in small intermittent channels and temporary swales.
- In small open channels that drain 10 acres or less.
- In steep channels where stormwater runoff velocities exceed 5 ft/s.
- During the establishment of grass linings in drainage ditches or channels.
- In temporary ditches where the short length of service does not warrant establishment of erosion-resistant linings.
- To act as a grade control structure.

Limitations

- Not to be used in live streams or in channels with extended base flows.
- Not appropriate in channels that drain areas greater than 10 acres.
- Not appropriate in channels that are already grass-lined unless erosion potential or sediment-laden flow is expected, as installation may damage vegetation.
- Require extensive maintenance following high velocity flows.
- Promotes sediment trapping which can be re-suspended during subsequent storms or removal of the check dam.
- Do not construct check dams with straw bales or silt fence.
- Water suitable for mosquito production may stand behind check dams, particularly if subjected to daily non-stormwater discharges.

Implementation

General

Check dams reduce the effective slope and create small pools in swales and ditches that drain 10 acres or less. Using check dams to reduce channel slope reduces the velocity of stormwater flows, thus reducing erosion of the swale or ditch and promoting sedimentation. Thus, check dams are dual-purpose and serve an important role as erosion controls as well as as sediment controls. Note that use of 1-2 isolated check dams for sedimentation will likely result in little net removal of sediment because of the small detention time and probable scour during longer storms. Using a series of check dams will generally increase their effectiveness. A sediment trap (SE-3) may be placed immediately upstream of the check dam to increase sediment removal efficiency.

Design and Layout

Check dams work by decreasing the effective slope in ditches and swales. An important consequence of the reduced slope is a reduction in capacity of the ditch or swale. This reduction in capacity should be considered when using this BMP, as reduced capacity can result in overtopping of the ditch or swale and resultant consequences. In some cases, such as a "permanent" ditch or swale being constructed early and used as a "temporary" conveyance for construction flows, the ditch or swale may have sufficient capacity such that the temporary reduction in capacity due to check dams is acceptable. When check dams reduce capacities beyond acceptable limits, either:

- Don't use check dams. Consider alternative BMPs, or.
- Increase the size of the ditch or swale to restore capacity.

Maximum slope and velocity reduction is achieved when the toe of the upstream dam is at the same elevation as the top of the downstream dam (see "Spacing Between Check Dams" detail at the end of this fact sheet). The center section of the dam should be lower than the edge sections (at least 6 inches), acting as a spillway, so that the check dam will direct flows to the center of

the ditch or swale (see "Typical Rock Check Dam" detail at the end of this fact sheet). Bypass or side-cutting can occur if a sufficient spillway is not provided in the center of the dam.

Check dams are usually constructed of rock, gravel bags, sandbags, and fiber rolls. A number of products can also be used as check dams (e.g. HDPE check dams, temporary silt dikes (SE-12)), and some of these products can be removed and reused. Check dams can also be constructed of logs or lumber, and have the advantage of a longer lifespan when compared to gravel bags, sandbags, and fiber rolls. Check dams should not be constructed from straw bales or silt fences, since concentrated flows quickly wash out these materials.

Rock check dams are usually constructed of 8 to 12 in. rock. The rock is placed either by hand or mechanically, but never just dumped into the channel. The dam should completely span the ditch or swale to prevent washout. The rock used should be large enough to stay in place given the expected design flow through the channel. It is recommended that abutments be extended 18 in. into the channel bank. Rock can be graded such that smaller diameter rock (e.g. 2-4 in) is located on the upstream side of larger rock (holding the smaller rock in place); increasing residence time.

Log check dams are usually constructed of 4 to 6 in. diameter logs, installed vertically. The logs should be embedded into the soil at least 18 in. Logs can be bolted or wired to vertical support logs that have been driven or buried into the soil.

See fiber rolls, SE-5, for installation of fiber roll check dams.

Gravel bag and sand bag check dams are constructed by stacking bags across the ditch or swale, shaped as shown in the drawings at the end of this fact sheet (see "Gravel Bag Check Dam" detail at the end of this fact sheet).

Manufactured products, such as temporary silt dikes (SE-12), should be installed in accordance with the manufacturer's instructions. Installation typically requires anchoring or trenching of products, as well as regular maintenance to remove accumulated sediment and debris.

If grass is planted to stabilize the ditch or swale, the check dam should be removed when the grass has matured (unless the slope of the swales is greater than 4%).

The following guidance should be followed for the design and layout of check dams:

- Install the first check dam approximately 16 ft from the outfall device and at regular intervals based on slope gradient and soil type.
- Check dams should be placed at a distance and height to allow small pools to form between each check dam.
- For multiple check dam installation, backwater from a downstream check dam should reach the toes of the upstream check dam.
- A sediment trap provided immediately upstream of the check dam will help capture sediment. Due to the potential for this sediment to be resuspended in subsequent storms, the sediment trap should be cleaned following each storm event.

- High flows (typically a 2-year storm or larger) should safely flow over the check dam without an increase in upstream flooding or damage to the check dam.
- Where grass is used to line ditches, check dams should be removed when grass has matured sufficiently to protect the ditch or swale.

Materials

- Rock used for check dams should typically be 8-12 in rock and be sufficiently sized to stay in place given expected design flows in the channel. Smaller diameter rock (e.g. 2 to 4 in) can be placed on the upstream side of larger rock to increase residence time.
- Gravel bags used for check dams should conform to the requirements of SE-6, Gravel Bag Berms.
- Sandbags used for check dams should conform to SE-8, Sandbag Barrier.
- Fiber rolls used for check dams should conform to SE-5, Fiber Rolls.
- Temporary silt dikes used for check dams should conform to SE-12, Temporary Silt Dikes.

Installation

- Rock should be placed individually by hand or by mechanical methods (no dumping of rock) to achieve complete ditch or swale coverage.
- Tightly abut bags and stack according to detail shown in the figure at the end of this section (pyramid approach). Gravel bags and sandbags should not be stacked any higher than 3 ft.
- Upper rows or gravel and sand bags shall overlap joints in lower rows.
- Fiber rolls should be trenched in, backfilled, and firmly staked in place.
- Install along a level contour.
- HDPE check dams, temporary silt dikes, and other manufactured products should be used and installed per manufacturer specifications.

Costs

Cost consists of labor costs if materials are readily available (such as gravel on-site). If material must be imported, costs will increase. For other material and installation costs, see SE-5, SE-6, SE-8, SE-12, and SE-14.

Inspection and Maintenance

- BMPs must be inspected in accordance with General Permit requirements for the associated project type and risk level. It is recommended that at a minimum, BMPs be inspected weekly, prior to forecasted rain events, daily during extended rain events, and after the conclusion of rain events.
- Replace missing rock, bags, rolls, etc. Replace bags or rolls that have degraded or have become damaged.

- If the check dam is used as a sediment capture device, sediment that accumulates behind the BMP should be periodically removed in order to maintain BMP effectiveness. Sediment should be removed when the sediment accumulation reaches one-third of the barrier height.
- If the check dam is used as a grade control structure, sediment removal is not required as long as the system continues to control the grade.
- Inspect areas behind check dams for pools of standing water, especially if subjected to daily non-stormwater discharges.
- Remove accumulated sediment prior to permanent seeding or soil stabilization.
- Remove check dam and accumulated sediment when check dams are no longer needed.

References

Draft – Sedimentation and Erosion Control, and Inventory of Current Practices, USEPA, April 1990.

Manual of Standards of Erosion and Sediment Control Measures, Association of Bay Area Governments, May 1995.

Stormwater Quality Handbooks - Construction Site Best Management Practices (BMPs) Manual, State of California Department of Transportation (Caltrans), March 2003.

Stormwater Management of the Puget Sound Basin, Technical Manual, Publication #91-75, Washington State Department of Ecology, February 1992.

Erosion and Sediment Control Manual, Oregon Department of Environmental Quality, February 2005.

Metzger, M.E. 2004. Managing mosquitoes in stormwater treatment devices. University of California Division of Agriculture and Natural Resources, Publication 8125. On-line: http://anrcatalog.ucdavis.edu/pdf/8125.pdf

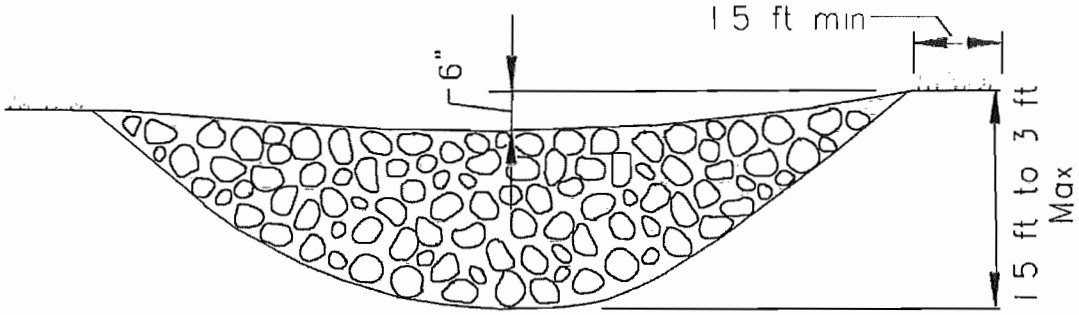

ELEVATION

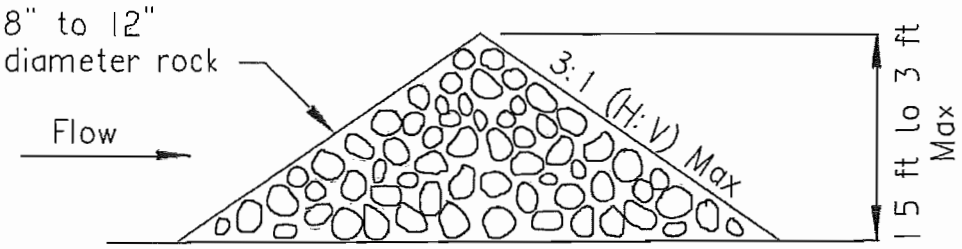

TYPICAL ROCK CHECK DAM SECTION

ROCK CHECK DAM
NOT TO SCALE

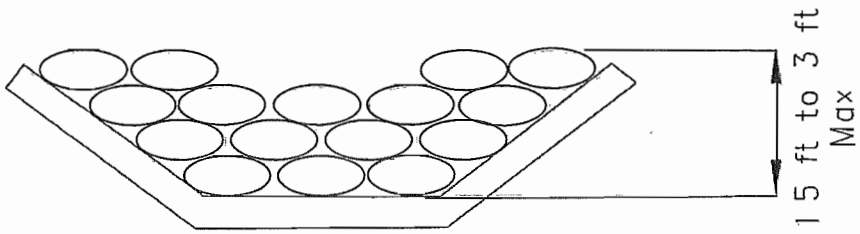

GRAVEL BAG CHECK DAM ELEVATION
NOT TO SCALE

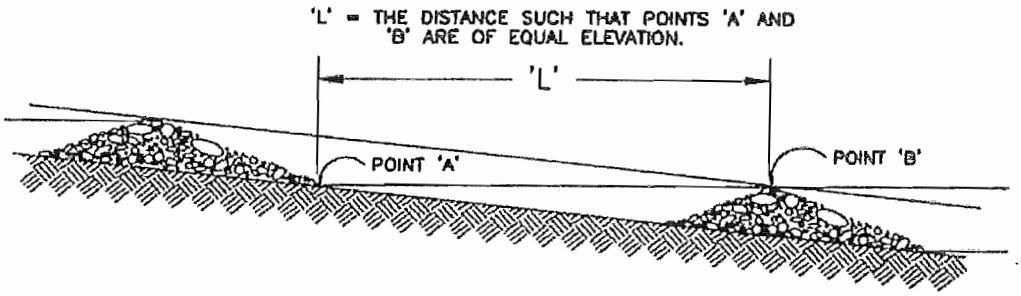

SPACING BETWEEN CHECK DAMS

Fiber Rolls

SE-5

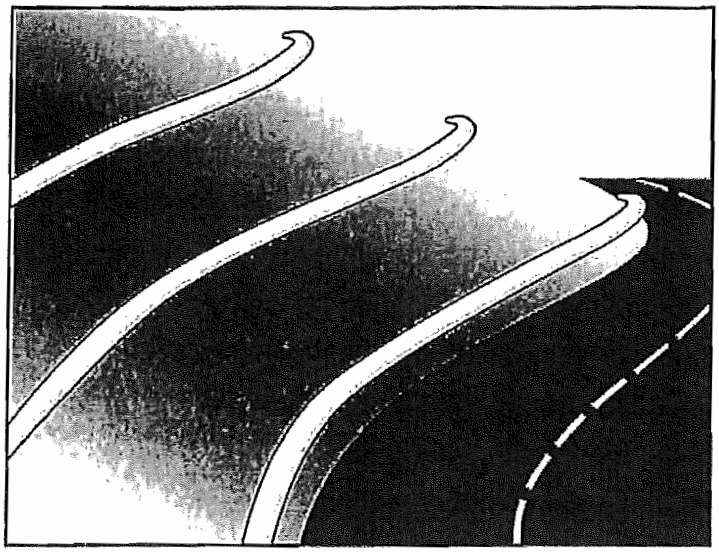

Categories

EC	Erosion Control	☒
SE	Sediment Control	☑
TC	Tracking Control	
WE	Wind Erosion Control	
NS	Non-Stormwater Management Control	
WM	Waste Management and Materials Pollution Control	

Legend:

☑ **Primary Category**

☒ **Secondary Category**

Description and Purpose

A fiber roll consists of straw, coir, or other biodegradable materials bound into a tight tubular roll wrapped by netting, which can be photodegradable or natural. Additionally, gravel core fiber rolls are available, which contain an imbedded ballast material such as gravel or sand for additional weight when staking the rolls are not feasible (such as use as inlet protection). When fiber rolls are placed at the toe and on the face of slopes along the contours, they intercept runoff, reduce its flow velocity, release the runoff as sheet flow, and provide removal of sediment from the runoff (through sedimentation). By interrupting the length of a slope, fiber rolls can also reduce sheet and rill erosion until vegetation is established.

Suitable Applications

Fiber rolls may be suitable:

- Along the toe, top, face, and at grade breaks of exposed and erodible slopes to shorten slope length and spread runoff as sheet flow.
- At the end of a downward slope where it transitions to a steeper slope.
- Along the perimeter of a project.
- As check dams in unlined ditches with minimal grade.
- Down-slope of exposed soil areas.
- At operational storm drains as a form of inlet protection.

Targeted Constituents

Sediment	☑
Nutrients	
Trash	
Metals	
Bacteria	
Oil and Grease	
Organics	

Potential Alternatives

SE-1 Silt Fence

SE-6 Gravel Bag Berm

SE-8 Sandbag Barrier

SE-12 Temporary Silt Dike

SE-14 Biofilter Bags

CASQA

CALIFORNIA STORMWATER

- Around temporary stockpiles.

Limitations

- Fiber rolls are not effective unless trenched in and staked.
- Not intended for use in high flow situations.
- Difficult to move once saturated.
- If not properly staked and trenched in, fiber rolls could be transported by high flows.
- Fiber rolls have a very limited sediment capture zone.
- Fiber rolls should not be used on slopes subject to creep, slumping, or landslide.
- Rolls typically function for 12-24 months depending upon local conditions.

Implementation

Fiber Roll Materials

- Fiber rolls should be prefabricated.
- Fiber rolls may come manufactured containing polyacrylamide (PAM), a flocculating agent within the roll. Fiber rolls impregnated with PAM provide additional sediment removal capabilities and should be used in areas with fine, clayey or silty soils to provide additional sediment removal capabilities. Monitoring may be required for these installations.
- Fiber rolls are made from weed free rice straw, flax, or a similar agricultural material bound into a tight tubular roll by netting.
- Typical fiber rolls vary in diameter from 9 in. to 20 in. Larger diameter rolls are available as well.

Installation

- Locate fiber rolls on level contours spaced as follows:
  - Slope inclination of 4:1 (H:V) or flatter: Fiber rolls should be placed at a maximum interval of 20 ft.
  - Slope inclination between 4:1 and 2:1 (H:V): Fiber Rolls should be placed at a maximum interval of 15 ft. (a closer spacing is more effective).
  - Slope inclination 2:1 (H:V) or greater: Fiber Rolls should be placed at a maximum interval of 10 ft. (a closer spacing is more effective).
- Prepare the slope before beginning installation.
- Dig small trenches across the slope on the contour. The trench depth should be ¼ to 1/3 of the thickness of the roll, and the width should equal the roll diameter, in order to provide area to backfill the trench.

- It is critical that rolls are installed perpendicular to water movement, and parallel to the slope contour.
- Start building trenches and installing rolls from the bottom of the slope and work up.
- It is recommended that pilot holes be driven through the fiber roll. Use a straight bar to drive holes through the roll and into the soil for the wooden stakes.
- Turn the ends of the fiber roll up slope to prevent runoff from going around the roll.
- Stake fiber rolls into the trench.
  - Drive stakes at the end of each fiber roll and spaced 4 ft maximum on center.
  - Use wood stakes with a nominal classification of 0.75 by 0.75 in. and minimum length of 24 in.
- If more than one fiber roll is placed in a row, the rolls should be overlapped, not abutted.
- See typical fiber roll installation details at the end of this fact sheet.

Removal

- Fiber rolls can be left in place or removed depending on the type of fiber roll and application (temporary vs. permanent installation). Typically, fiber rolls encased with plastic netting are used for a temporary application because the netting does not biodegrade. Fiber rolls used in a permanent application are typically encased with a biodegradeable material and are left in place. Removal of a fiber roll used in a permanent application can result in greater disturbance.
- Temporary installations should only be removed when up gradient areas are stabilized per General Permit requirements, and/or pollutant sources no longer present a hazard. But, they should also be removed before vegetation becomes too mature so that the removal process does not disturb more soil and vegetation than is necessary.

Costs

Material costs for regular fiber rolls range from $20 - $30 per 25 ft roll.

Material costs for PAM impregnated fiber rolls range between 7.00-$9.00 per linear foot, based upon vendor research.

Inspection and Maintenance

- BMPs must be inspected in accordance with General Permit requirements for the associated project type and risk level. It is recommended that at a minimum, BMPs be inspected weekly, prior to forecasted rain events, daily during extended rain events, and after the conclusion of rain events.
- Repair or replace split, torn, unraveling, or slumping fiber rolls.
- If the fiber roll is used as a sediment capture device, or as an erosion control device to maintain sheet flows, sediment that accumulates in the BMP should be periodically removed

in order to maintain BMP effectiveness. Sediment should be removed when sediment accumulation reaches one-third the designated sediment storage depth.

- If fiber rolls are used for erosion control, such as in a check dam, sediment removal should not be required as long as the system continues to control the grade. Sediment control BMPs will likely be required in conjunction with this type of application.
- Repair any rills or gullies promptly.

References

Stormwater Quality Handbooks - Construction Site Best Management Practices (BMPs) Manual, State of California Department of Transportation (Caltrans), March 2003.

Erosion and Sediment Control Manual, Oregon Department of Environmental Quality, February 2005.

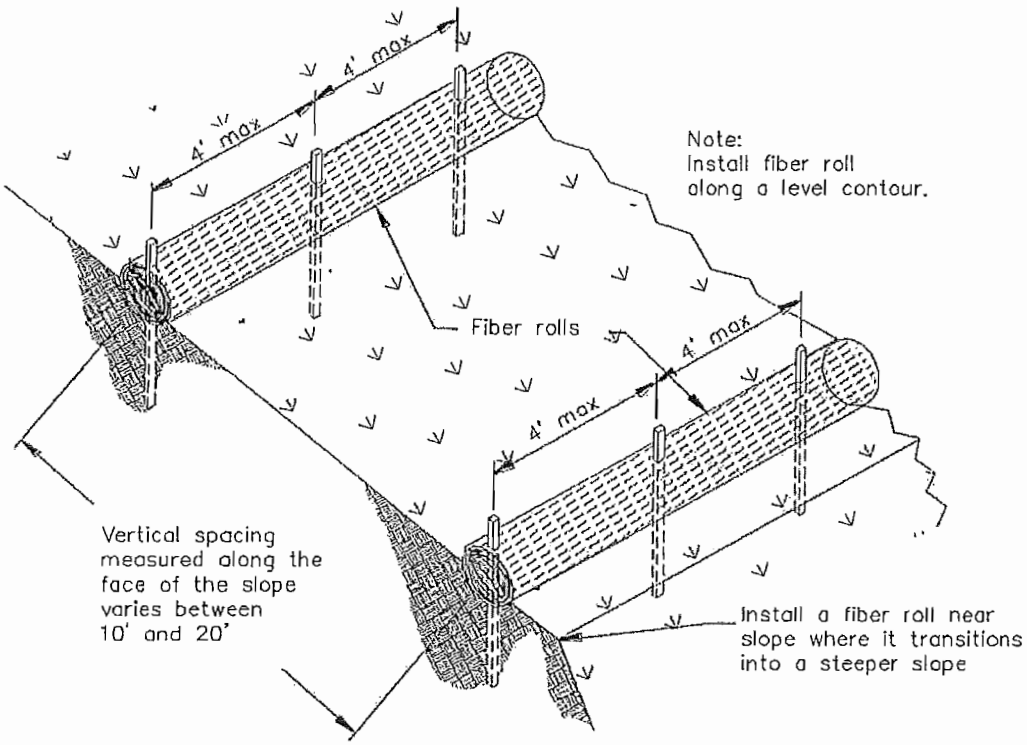

TYPICAL FIBER ROLL INSTALLATION

N.T.S.

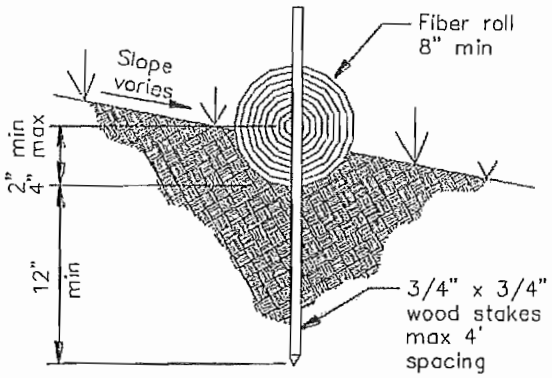

ENTRENCHMENT DETAIL

N.T.S.

Gravel Bag Berm

SE-6

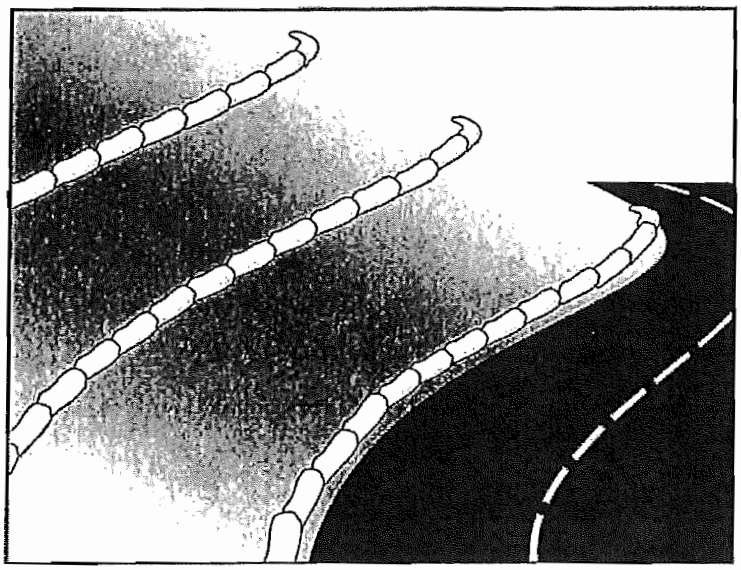

Categories

EC	Erosion Control	☒
SE	Sediment Control	☑
TC	Tracking Control	
WE	Wind Erosion Control	
NS	Non-Stormwater Management Control	
WM	Waste Management and Materials Pollution Control	

Legend:

☑ **Primary Category**

☒ **Secondary Category**

Description and Purpose

A gravel bag berm is a series of gravel-filled bags placed on a level contour to intercept sheet flows. Gravel bags pond sheet flow runoff, allowing sediment to settle out, and release runoff slowly as sheet flow, preventing erosion.

Suitable Applications

Gravel bag berms may be suitable:

- As a linear sediment control measure:
  - Below the toe of slopes and erodible slopes
  - As sediment traps at culvert/pipe outlets
  - Below other small cleared areas
  - Along the perimeter of a site
  - Down slope of exposed soil areas
  - Around temporary stockpiles and spoil areas
  - Parallel to a roadway to keep sediment off paved areas
  - Along streams and channels
- As a linear erosion control measure:
  - Along the face and at grade breaks of exposed and erodible slopes to shorten slope length and spread runoff as sheet flow.

Targeted Constituents

Sediment	☑
Nutrients	
Trash	
Metals	
Bacteria	
Oil and Grease	
Organics	

Potential Alternatives

SE-1 Silt Fence

SE-5 Fiber Roll

SE-8 Sandbag Barrier

SE-12 Temporary Silt Dike

SE-14 Biofilter Bags

CASQA

CALIFORNIA STORMWATER

- At the top of slopes to divert runoff away from disturbed slopes.
- As chevrons (small check dams) across mildly sloped construction roads. For use check dam use in channels, see SE-4, Check Dams.

Limitations

- Gravel berms may be difficult to remove.
- Removal problems limit their usefulness in landscaped areas.
- Gravel bag berm may not be appropriate for drainage areas greater than 5 acres.
- Runoff will pond upstream of the berm, possibly causing flooding if sufficient space does not exist.
- Degraded gravel bags may rupture when removed, spilling contents.
- Installation can be labor intensive.
- Durability of gravel bags is somewhat limited and bags may need to be replaced when installation is required for longer than 6 months.
- Easily damaged by construction equipment.
- When used to detain concentrated flows, maintenance requirements increase.

Implementation

General

A gravel bag berm consists of a row of open graded gravel-filled bags placed on a level contour. When appropriately placed, a gravel bag berm intercepts and slows sheet flow runoff, causing temporary ponding. The temporary ponding allows sediment to settle. The open graded gravel in the bags is porous, which allows the ponded runoff to flow slowly through the bags, releasing the runoff as sheet flows. Gravel bag berms also interrupt the slope length and thereby reduce erosion by reducing the tendency of sheet flows to concentrate into rivulets, which erode rills, and ultimately gullies, into disturbed, sloped soils. Gravel bag berms are similar to sand bag barriers, but are more porous. Generally, gravel bag berms should be used in conjunction with temporary soil stabilization controls up slope to provide effective erosion and sediment control.

Design and Layout

- Locate gravel bag berms on level contours.
- When used for slope interruption, the following slope/sheet flow length combinations apply:
  - Slope inclination of 4:1 (H:V) or flatter: Gravel bags should be placed at a maximum interval of 20 ft, with the first row near the slope toe.
  - Slope inclination between 4:1 and 2:1 (H:V): Gravel bags should be placed at a maximum interval of 15 ft. (a closer spacing is more effective), with the first row near the slope toe.

Slope inclination 2:1 (H:V) or greater: Gravel bags should be placed at a maximum interval of 10 ft. (a closer spacing is more effective), with the first row near the slope toe.

- Turn the ends of the gravel bag barriers up slope to prevent runoff from going around the berm.
- Allow sufficient space up slope from the gravel bag berm to allow ponding, and to provide room for sediment storage.
- For ~~installation~~ near the toe of the slope, gravel bag barriers should be set back from the slope toe to facilitate cleaning. Where specific site conditions do not allow for a set-back, the gravel bag barrier may be constructed on the toe of the slope. To prevent flows behind the barrier, bags can be placed perpendicular to a berm to serve as cross barriers.
- Drainage area should not exceed 5 acres.
- In Non-Traffic Areas:
  - Height = 18 in. maximum
  - Top width = 24 in. minimum for three or more layer construction
  - Top width = 12 in. minimum for one or two layer construction
  - Side slopes = 2:1 (H:V) or flatter
- In Construction Traffic Areas:
  - Height = 12 in. maximum
  - Top width = 24 in. minimum for three or more layer construction.
  - Top width = 12 in. minimum for one or two layer construction.
  - Side slopes = 2:1 (H:V) or flatter.
- Butt ends of bags tightly.
- On multiple row, or multiple layer construction, overlap butt joints of adjacent row and row beneath.
- Use a pyramid approach when stacking bags.

Materials

- ***Bag Material:*** Bags should be woven polypropylene, polyethylene or polyamide fabric or burlap, minimum unit weight of 4 ounces/yd^2, Mullen burst strength exceeding 300 lb/in^2 in conformance with the requirements in ASTM designation D3786, and ultraviolet stability exceeding 70% in conformance with the requirements in ASTM designation D4355.

- ***Bag Size:*** Each gravel-filled bag should have a length of 18 in., width of 12 in., thickness of 3 in., and mass of approximately 33 lbs. Bag dimensions are nominal, and may vary based on locally available materials.

- ***Fill Material:*** Fill material should be 0.5 to 1 in. crushed rock, clean and free from clay, organic matter, and other deleterious material, or other suitable open graded, non-cohesive, porous gravel.

Costs

Material costs for gravel bags are average and are dependent upon material availability. $2.50-3.00 per filled gravel bag is standard based upon vendor research.

Inspection and Maintenance

- BMPs must be inspected in accordance with General Permit requirements for the associated project type and risk level. It is recommended that at a minimum, BMPs be inspected weekly, prior to forecasted rain events, daily during extended rain events, and after the conclusion of rain events.

- Gravel bags exposed to sunlight will need to be replaced every two to three months due to degrading of the bags.

- Reshape or replace gravel bags as needed.

- Repair washouts or other damage as needed.

- Sediment that accumulates in the BMP should be periodically removed in order to maintain BMP effectiveness. Sediment should be removed when the sediment accumulation reaches one-third of the barrier height.

- Remove gravel bag berms when no longer needed and recycle gravel fill whenever possible and properly dispose of bag material. Remove sediment accumulation and clean, re-grade, and stabilize the area.

References

Handbook of Steel Drainage and Highway Construction, American Iron and Steel Institute, 1983.

Stormwater Quality Handbooks - Construction Site Best Management Practices (BMPs) Manual, State of California Department of Transportation (Caltrans), March 2003.

Stormwater Pollution Plan Handbook, First Edition, State of California, Department of Transportation Division of New Technology, Materials and Research, October 1992.

Erosion and Sediment Control Manual, Oregon Department of Environmental Quality, February 2005.

Sandbag Barrier SE-8

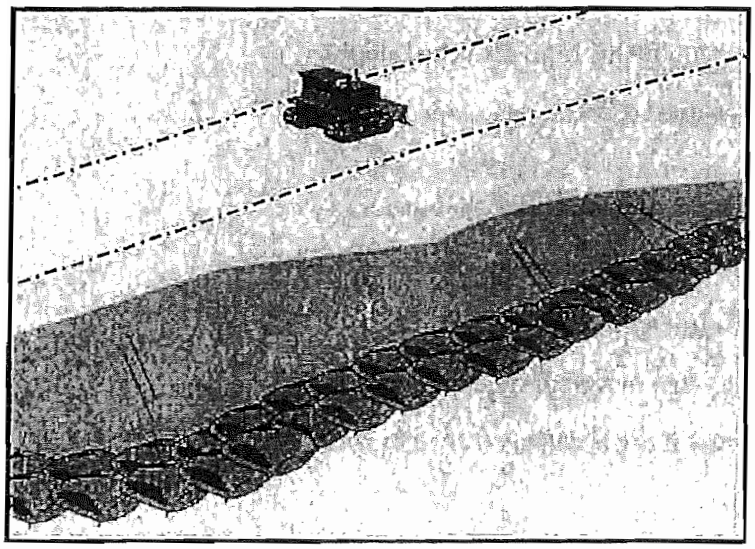

Categories

EC	Erosion Control	☒
SE	Sediment Control	☑
TC	Tracking Control	
WE	Wind Erosion Control	
NS	Non-Stormwater Management Control	
WM	Waste Management and Materials Pollution Control	

Legend:

☑ **Primary Category**

☒ **Secondary Category**

Targeted Constituents

Sediment	☑
Nutrients	
Trash	
Metals	
Bacteria	
Oil and Grease	
Organics	

Potential Alternatives

SE-1 Silt Fence

SE-5 Fiber Rolls

SE-6 Gravel Bag Berm

SE-12 Temporary Silt Dike

SE-14 Biofilter Bags

Description and Purpose

A sandbag barrier is a series of sand-filled bags placed on a level contour to intercept or to divert sheet flows. Sandbag barriers placed on a level contour pond sheet flow runoff, allowing sediment to settle out.

Suitable Applications

Sandbag barriers may be suitable:

- As a linear sediment control measure:
  - Below the toe of slopes and erodible slopes.
  - As sediment traps at culvert/pipe outlets.
  - Below other small cleared areas.
  - Along the perimeter of a site.
  - Down slope of exposed soil areas.
  - Around temporary stockpiles and spoil areas.
  - Parallel to a roadway to keep sediment off paved areas.
  - Along streams and channels.
- As linear erosion control measure:
  - Along the face and at grade breaks of exposed and erodible slopes to shorten slope length and spread runoff as sheet flow.

CASQA
CALIFORNIA STORMWATER

- At the top of slopes to divert runoff away from disturbed slopes.
- As check dams across mildly sloped construction roads.

Limitations

- It is necessary to limit the drainage area upstream of the barrier to 5 acres.
- Sandbags are not intended to be used as filtration devices.
- Easily damaged by construction equipment.
- Degraded sandbags may rupture when removed, spilling sand.
- Sand is easily transported by runoff if bag is damaged or ruptured.
- Installation can be labor intensive.
- Durability of sandbags is somewhat limited and bags may need to be replaced when installation is required for longer than 6 months. When used to detain concentrated flows, maintenance requirements increase.
- Burlap should not be used for sandbags.

Implementation

General

A sandbag barrier consists of a row of sand-filled bags placed on a level contour. When appropriately placed, a sandbag barrier intercepts and slows sheet flow runoff, causing temporary ponding. The temporary ponding allows sediment to settle. Sand-filled bags have limited porosity, which is further limited as the fine sand tends to quickly plug with sediment, limiting or completely blocking the rate of flow through the barrier. If a porous barrier is desired, consider SE-1, Silt Fence, SE-5, Fiber Rolls, SE-6, Gravel Bag Berms or SE-14, Biofilter Bags. Sandbag barriers also interrupt the slope length and thereby reduce erosion by reducing the tendency of sheet flows to concentrate into rivulets which erode rills, and ultimately gullies, into disturbed, sloped soils. Sandbag barriers are similar to gravel bag berms, but less porous. Generally, sandbag barriers should be used in conjunction with temporary soil stabilization controls up slope to provide effective erosion and sediment control.

Design and Layout

- Locate sandbag barriers on a level contour.
- When used for slope interruption, the following slope/sheet flow length combinations apply:
  - Slope inclination of 4:1 (H:V) or flatter: Sandbags should be placed at a maximum interval of 20 ft, with the first row near the slope toe.
  - Slope inclination between 4:1 and 2:1 (H:V): Sandbags should be placed at a maximum interval of 15 ft. (a closer spacing is more effective), with the first row near the slope toe.

    Slope inclination 2:1 (H:V) or greater: Sandbags should be placed at a maximum interval of 10 ft. (a closer spacing is more effective), with the first row near the slope toe.

- ***Fill Material:*** All sandbag fill material should be non-cohesive, Class 3 (Caltrans Standard Specification, Section 25) permeable material free from clay and deleterious material, such as recycled concrete or asphalt..

Costs

Empty sandbags cost $0.25 - $0.75. Average cost of fill material is $8 per yd^3. Additional labor is required to fill the bags. Pre-filled sandbags are more expensive at $1.50 - $2.00 per bag. These costs are based upon vendor research.

Inspection and Maintenance

- BMPs must be inspected in accordance with General Permit requirements for the associated project type and risk level. It is recommended that at a minimum, BMPs be inspected weekly, prior to forecasted rain events, daily during extended rain events, and after the conclusion of rain events.
- Sandbags exposed to sunlight will need to be replaced every two to three months due to degradation of the bags.
- Reshape or replace sandbags as needed.
- Repair washouts or other damage as needed.
- Sediment that accumulates behind the BMP should be periodically removed in order to maintain BMP effectiveness. Sediment should be removed when the sediment accumulation reaches one-third of the barrier height.
- Remove sandbags when no longer needed and recycle sand fill whenever possible and properly dispose of bag material. Remove sediment accumulation, and clean, re-grade, and stabilize the area.

References

Standard Specifications for Construction of Local Streets and Roads, California Department of Transportation (Caltrans), July 2002.

Stormwater Quality Handbooks - Construction Site Best Management Practices (BMPs) Manual, State of California Department of Transportation (Caltrans), March 2003.

Erosion and Sediment Control Manual, Oregon Department of Environmental Quality, February 2005.

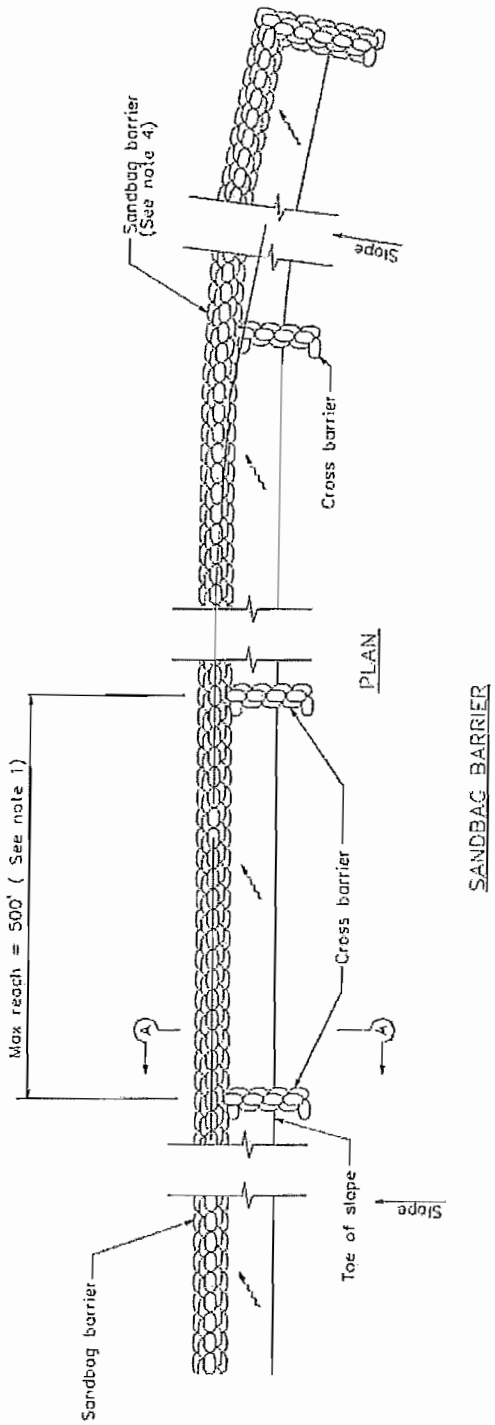

SANDBAG BARRIER

NOTES

1. Construct the length of each reach so that the change in base elevation along the reach does not exceed 1/2 the height of the linear barrier. In no case shall the reach length exceed 500'
2. Place sandbags tightly.
3. Dimension may vary to fit field condition
4. Sandbag barrier shall be a minimum of 3 bags high
5. The end of the barrier shall be turned up slope.
6. Cross barriers shall be a min of 1/2 and a max of 2/3 the height of the linear barrier
7. Sandbag rows and layers shall be staggered to eliminate gaps.

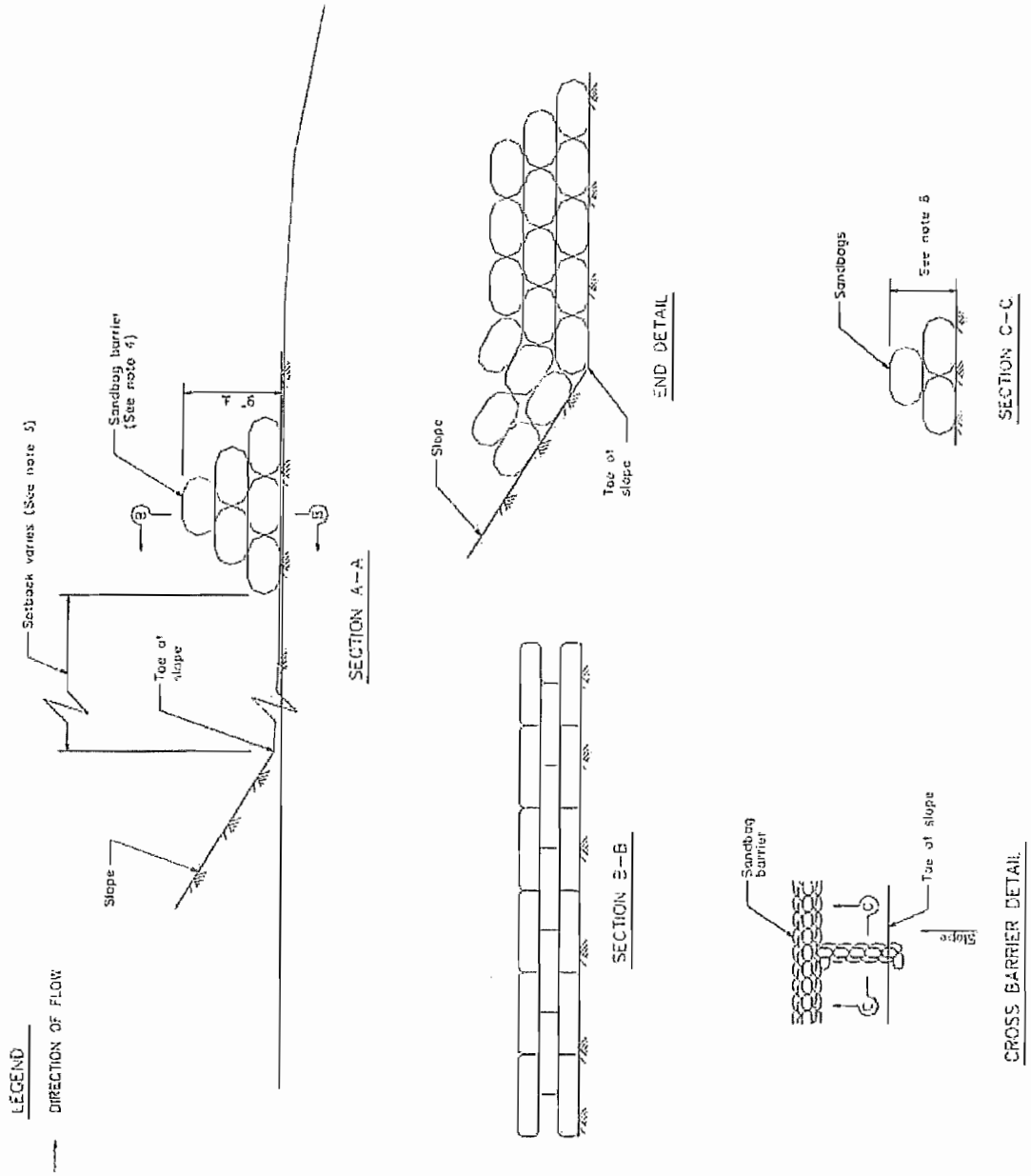
LEGEND
DIRECTION OF FLOW
Setback varies (See note 5)
Sandbag barrier (See note 4)
Toe of slope
Slope
SECTION A–A
SECTION B–B
Slope
Toe of slope
END DETAIL
Sandbags
See note 6
SECTION C–C
Sandbag barrier
Toe of slope
Slope
CROSS BARRIER DETAIL

Straw Bale Barrier SE-9

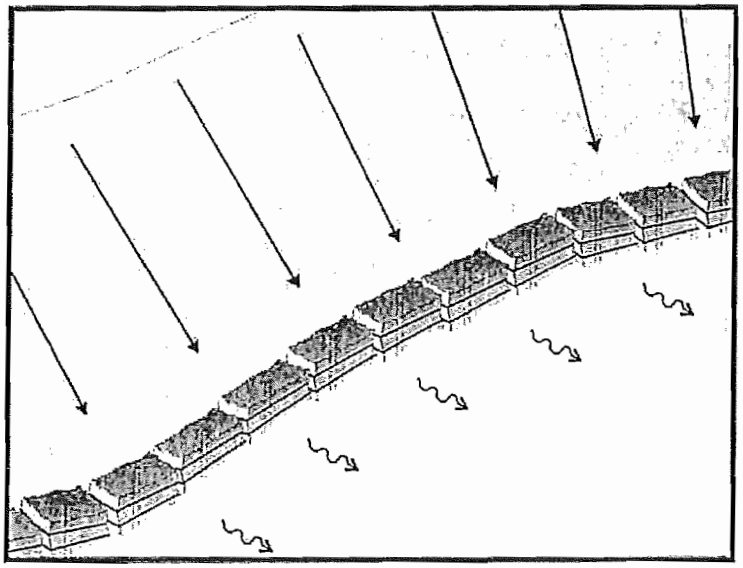

Categories

EC	Erosion Control	☒
SE	Sediment Control	☑
TC	Tracking Control	
WE	Wind Erosion Control	
NS	Non-Stormwater Management Control	
WM	Waste Management and Materials Pollution Control	

Legend:

☑ **Primary Objective**

☒ **Secondary Objective**

Targeted Constituents

Sediment	☑
Nutrients	
Trash	
Metals	
Bacteria	
Oil and Grease	
Organics	

Potential Alternatives

SE-1 Silt Fence

SE-5 Fiber Rolls

SE-6 Gravel Bag Berm

SE-8 Sandbag Barrier

SE-12 Temporary Silt Dike

SE-14 Biofilter Bags

Description and Purpose

A straw bale barrier is a series of straw bales placed on a level contour to intercept sheet flows. Straw bale barriers pond sheet-flow runoff, allowing sediment to settle out.

Suitable Applications

Straw bale barriers may be suitable:

- As a linear sediment control measure:
  - Below the toe of slopes and erodible slopes
  - As sediment traps at culvert/pipe outlets
  - Below other small cleared areas
  - Along the perimeter of a site
  - Down slope of exposed soil areas
  - Around temporary stockpiles and spoil areas
  - Parallel to a roadway to keep sediment off paved areas
  - Along streams and channels
- As linear erosion control measure:
  - Along the face and at grade breaks of exposed and erodible slopes to shorten slope length and spread runoff as sheet flow

CASQA
CALIFORNIA STORMWATER

- At the top of slopes to divert runoff away from disturbed slopes
- As check dams across mildly sloped construction roads

Limitations

Straw bale barriers:

- Are not to be used for extended periods of time because they tend to rot and fall apart
- Are suitable only for sheet flow on slopes of 10 % or flatter
- Are not appropriate for large drainage areas, limit to one acre or less
- May require constant maintenance due to rotting
- Are not recommended for concentrated flow, inlet protection, channel flow, and live streams
- Cannot be made of bale bindings of jute or cotton
- Require labor-intensive installation and maintenance
- Cannot be used on paved surfaces
- Should not to be used for drain inlet protection
- Should not be used on lined ditches
- May introduce undesirable non-native plants to the area

Implementation

General

A straw bale barrier consists of a row of straw bales placed on a level contour. When appropriately placed, a straw bale barrier intercepts and slows sheet flow runoff, causing temporary ponding. The temporary ponding provides quiescent conditions allowing sediment to settle. Straw bale barriers also interrupt the slope length and thereby reduce erosion by reducing the tendency of sheet flows to concentrate into rivulets, which erode rills, and ultimately gullies, into disturbed, sloped soils.

Straw bale barriers have not been as effective as expected due to improper use. These barriers have been placed in streams and drainage ways where runoff volumes and velocities have caused the barriers to wash out. In addition, failure to stake and entrench the straw bale has allowed undercutting and end flow. Use of straw bale barriers in accordance with this BMP should produce acceptable results.

Design and Layout

- Locate straw bale barriers on a level contour.
  - Slopes up to 10:1 (H:V): Straw bales should be placed at a maximum interval of 50 ft (a closer spacing is more effective), with the first row near the toe of slope.
  - Slopes greater than 10:1 (H:V): Not recommended.

- Turn the ends of the straw bale barrier up slope to prevent runoff from going around the barrier.
- Allow sufficient space up slope from the barrier to allow ponding, and to provide room for sediment storage.
- For installation near the toe of the slope, consider moving the barrier away from the slope toe to facilitate cleaning. To prevent flow behind the barrier, sand bags can be placed perpendicular to the barrier to serve as cross barriers.
- Drainage area should not exceed 1 acre, or 0.25 acre per 100 ft of barrier.
- Maximum flow path to the barrier should be limited to 100 ft.
- Straw bale barriers should consist of two parallel rows.
  - Butt ends of bales tightly
  - Stagger butt joints between front and back row
  - Each row of bales must be trenched in and firmly staked
- Straw bale barriers are limited in height to one bale laid on its side.
- Anchor bales with either two wood stakes or four bars driven through the bale and into the soil. Drive the first stake towards the butt joint with the adjacent bale to force the bales together.
- See attached figure for installation details.

Materials

- ***Straw Bale Size:*** Each straw bale should be a minimum of 14 in. wide, 18 in. in height, 36 in. in length and should have a minimum mass of 50 lbs. The straw bale should be composed entirely of vegetative matter, except for the binding material.
- ***Bale Bindings:*** Bales should be bound by steel wire, nylon or polypropylene string placed horizontally. Jute and cotton binding should not be used. Baling wire should be a minimum diameter of 14 gauge. Nylon or polypropylene string should be approximately 12 gauge in diameter with a breaking strength of 80 lbs force.
- ***Stakes:*** Wood stakes should be commercial quality lumber of the size and shape shown on the plans. Each stake should be free from decay, splits or cracks longer than the thickness of the stake, or other defects that would weaken the stakes and cause the stakes to be structurally unsuitable. Steel bar reinforcement should be equal to a #4 designation or greater. End protection should be provided for any exposed bar reinforcement.

Costs

Straw bales cost $5 - $7 each. Adequate labor should be budgeted for installation and maintenance.

Inspection and Maintenance

Maintenance

- Inspect BMPs in accordance with General Permit requirements for the associated project type and risk level. It is recommended that at a minimum, BMPs be inspected weekly, prior to forecasted rain events, daily during extended rain events, and after the conclusion of rain events.
- Straw bales degrade, especially when exposed to moisture. Rotting bales will need to be replaced on a regular basis.
- Replace or repair damaged bales as needed.
- Repair washouts or other damages as needed.
- Sediment that accumulates in the BMP must be periodically removed in order to maintain BMP effectiveness. Sediment should be removed when the sediment accumulation reaches one-third of the barrier height. Sediment removed during maintenance may be incorporated into earthwork on the site or disposed at an appropriate location.
- Remove straw bales when no longer needed. Remove sediment accumulation, and clean, re-grade, and stabilize the area. Removed sediment should be incorporated in the project or disposed of.

References

Stormwater Quality Handbooks - Construction Site Best Management Practices (BMPs) Manual, State of California Department of Transportation (Caltrans), November 2000.

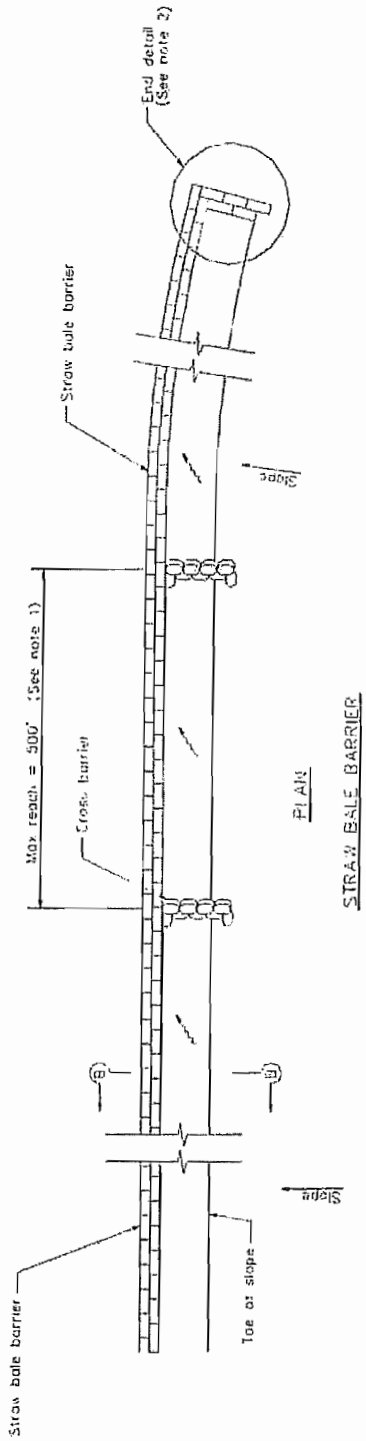

PLAN

STRAW BALE BARRIER

LEGEND

DIRECTION OF FLOW

NOTES

1. Construct the length of each reach so that the change in base elevation along the reach does not exceed 1/2 the height of the linear barrier in no case shall the reach length exceed 500'
2. The end of barrier shall be turned up slope
3. Dimension may vary to fit field condition
4. Stake dimensions are nominal
5. Place straw bales tightly together
6. Tamp embedment spoils against sides of installed bales
7. Drive angled wood stake before vertical stake to ensure tight abutment to adjacent bale
8. Sandbag cross barriers should be a min of 1/2 and a max of 2/3 the height of the linear barrier
9. Sandbag rows and layers should be offset to eliminate gaps

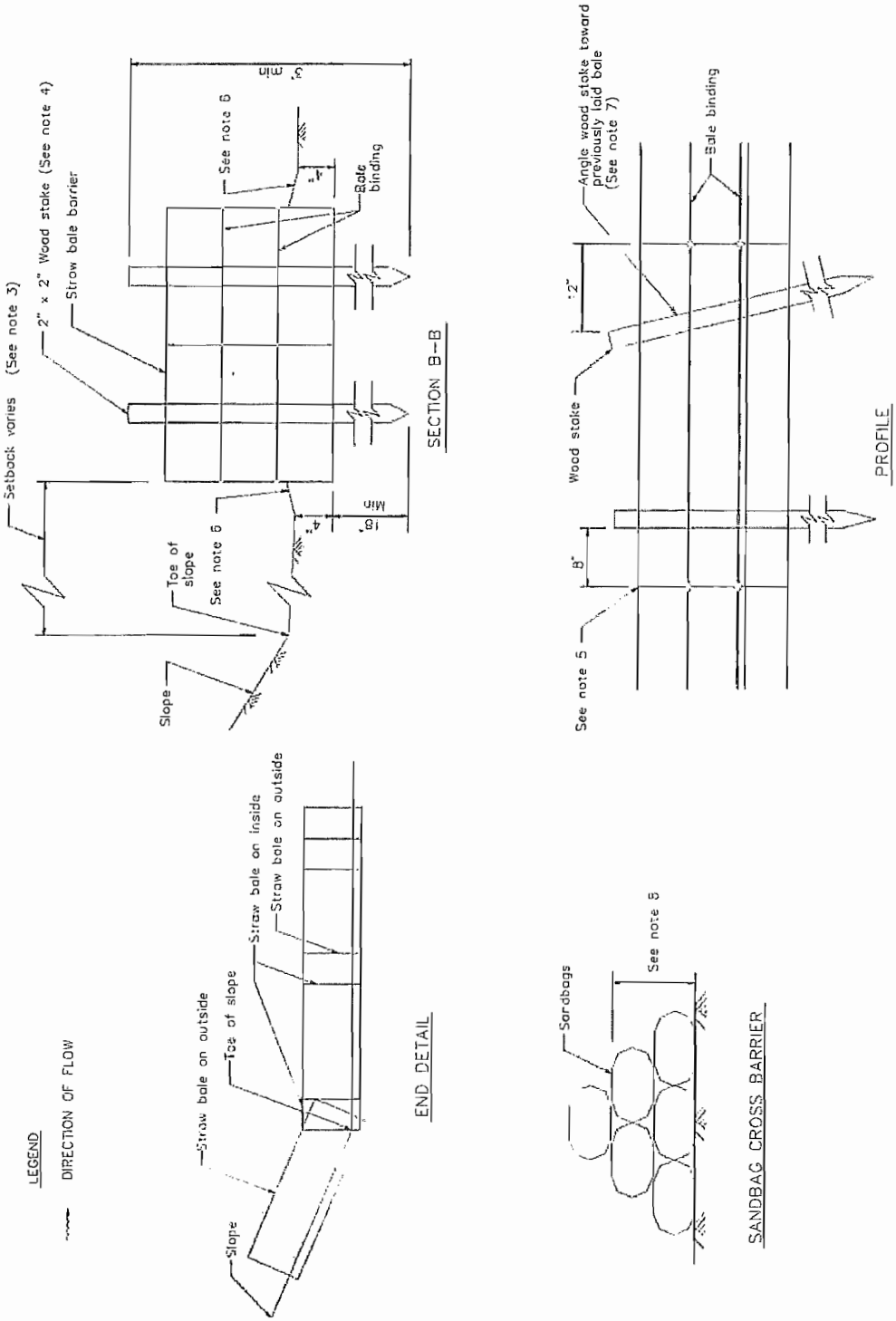
Setback varies (See note 3)
2" x 2" Wood stake (See note 4)
Straw bale barrier
3' min
See note 6
4"
Bale binding
Toe of slope
See note 6
4"
18" Min
Slope
SECTION B-B
Angle wood stake toward previously laid bale (See note 7)
Bale binding
12"
Wood stake
8"
See note 5
PROFILE
LEGEND
DIRECTION OF FLOW
Straw bale on outside
Toe of slope
Straw bale on inside
Straw bale on outside
Slope
END DETAIL
Sandbags
See note 6
SANDBAG CROSS BARRIER

Storm Drain Inlet Protection SE-10

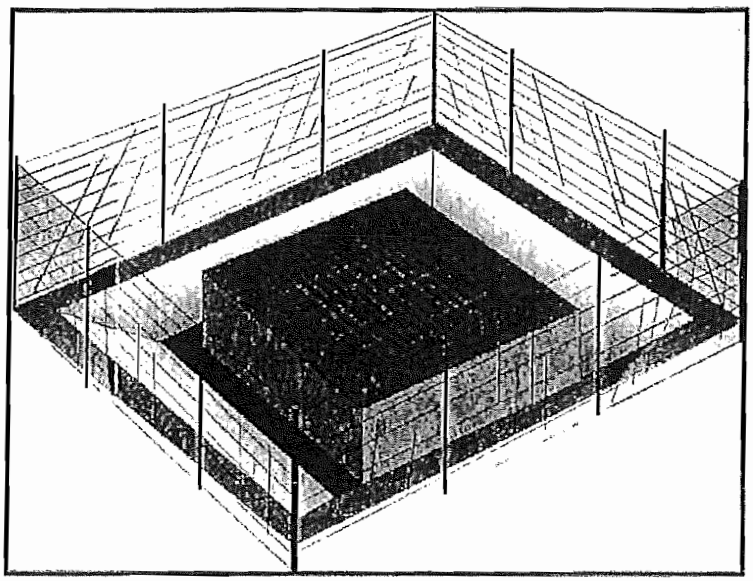

Categories

EC	Erosion Control	
SE	Sediment Control	☑
TC	Tracking Control	
WE	Wind Erosion Control	
NS	Non-Stormwater Management Control	
WM	Waste Management and Materials Pollution Control	

Legend:

☑ **Primary Category**

☒ **Secondary Category**

Targeted Constituents

Sediment	☑
Nutrients	
Trash	☒
Metals	
Bacteria	
Oil and Grease	
Organics	

Potential Alternatives

SE-1 Silt Fence

SE-5 Fiber Rolls

SE-6 Gravel Bag Berm

SE-8 Sandbag Barrier

SE-14 Biofilter Bags

Description and Purpose

Storm drain inlet protection consists of a sediment filter or an impounding area in, around or upstream of a storm drain, drop inlet, or curb inlet. Storm drain inlet protection measures temporarily pond runoff before it enters the storm drain, allowing sediment to settle. Some filter configurations also remove sediment by filtering, but usually the ponding action results in the greatest sediment reduction. Temporary geotextile storm drain inserts attach underneath storm drain grates to capture and filter storm water.

Suitable Applications

Every storm drain inlet receiving runoff from unstabilized or otherwise active work areas should be protected. Inlet protection should be used in conjunction with other erosion and sediment controls to prevent sediment-laden stormwater and non-stormwater discharges from entering the storm drain system.

Limitations

- Drainage area should not exceed 1 acre.
- In general straw bales should not be used as inlet protection.
- Requires an adequate area for water to pond without encroaching into portions of the roadway subject to traffic.

CASQA
CALIFORNIA STORMWATER

- Sediment removal may be inadequate to prevent sediment discharges in high flow conditions or if runoff is heavily sediment laden. If high flow conditions are expected, use other onsite sediment trapping techniques in conjunction with inlet protection.
- Frequent maintenance is required.
- Limit drainage area to 1 acre maximum. For drainage areas larger than 1 acre, runoff should be routed to a sediment-trapping device designed for larger flows. See BMPs SE-2, Sediment Basin, and SE-3, Sediment Traps.
- Excavated drop inlet sediment traps are appropriate where relatively heavy flows are expected, and overflow capability is needed.

Implementation

General

Inlet control measures presented in this handbook should not be used for inlets draining more than one acre. Runoff from larger disturbed areas should be first routed through SE-2, Sediment Basin or SE-3, Sediment Trap and/or used in conjunction with other drainage control, erosion control, and sediment control BMPs to protect the site. Different types of inlet protection are appropriate for different applications depending on site conditions and the type of inlet. Alternative methods are available in addition to the methods described/shown herein such as prefabricated inlet insert devices, or gutter protection devices.

Design and Layout

Identify existing and planned storm drain inlets that have the potential to receive sediment-laden surface runoff. Determine if storm drain inlet protection is needed and which method to use.

- The key to successful and safe use of storm drain inlet protection devices is to know where runoff that is directed toward the inlet to be protected will pond or be diverted as a result of installing the protection device.
  - Determine the acceptable location and extent of ponding in the vicinity of the drain inlet. The acceptable location and extent of ponding will influence the type and design of the storm drain inlet protection device.
  - Determine the extent of potential runoff diversion caused by the storm drain inlet protection device. Runoff ponded by inlet protection devices may flow around the device and towards the next downstream inlet. In some cases, this is acceptable; in other cases, serious erosion or downstream property damage can be caused by these diversions. The possibility of runoff diversions will influence whether or not storm drain inlet protection is suitable; and, if suitable, the type and design of the device.
- The location and extent of ponding, and the extent of diversion, can usually be controlled through appropriate placement of the inlet protection device. In some cases, moving the inlet protection device a short distance upstream of the actual inlet can provide more efficient sediment control, limit ponding to desired areas, and prevent or control diversions.

- Six types of inlet protection are presented below. However, it is recognized that other effective methods and proprietary devices exist and may be selected.
  - Silt Fence: Appropriate for drainage basins with less than a 5% slope, sheet flows, and flows under 0.5 cfs.
  - Excavated Drop Inlet Sediment Trap: An excavated area around the inlet to trap sediment (SE-3).
  - Gravel bag barrier: Used to create a small sediment trap upstream of inlets on sloped, paved streets. Appropriate for sheet flow or when concentrated flow may exceed 0.5 cfs, and where overtopping is required to prevent flooding.
  - Block and Gravel Filter: Appropriate for flows greater than 0.5 cfs.
  - Temporary Geotextile Storm drain Inserts: Different products provide different features. Refer to manufacturer details for targeted pollutants and additional features.
  - Biofilter Bag Barrier: Used to create a small retention area upstream of inlets and can be located on pavement or soil. Biofilter bags slowly filter runoff allowing sediment to settle out. Appropriate for flows under 0.5 cfs.
- Select the appropriate type of inlet protection and design as referred to or as described in this fact sheet.
- Provide area around the inlet for water to pond without flooding structures and property.
- Grates and spaces around all inlets should be sealed to prevent seepage of sediment-laden water.
- Excavate sediment sumps (where needed) 1 to 2 ft with 2:1 side slopes around the inlet.

Installation

- ***DI Protection Type 1 - Silt Fence*** - Similar to constructing a silt fence; see BMP SE-1, Silt Fence. Do not place fabric underneath the inlet grate since the collected sediment may fall into the drain inlet when the fabric is removed or replaced and water flow through the grate will be blocked resulting in flooding. See typical Type 1 installation details at the end of this fact sheet.

  1. Excavate a trench approximately 6 in. wide and 6 in. deep along the line of the silt fence inlet protection device.
  2. Place 2 in. by 2 in. wooden stakes around the perimeter of the inlet a maximum of 3 ft apart and drive them at least 18 in. into the ground or 12 in. below the bottom of the trench. The stakes should be at least 48 in.
  3. Lay fabric along bottom of trench, up side of trench, and then up stakes. See SE-1, Silt Fence, for details. The maximum silt fence height around the inlet is 24 in.
  4. Staple the filter fabric (for materials and specifications, see SE-1, Silt Fence) to wooden stakes. Use heavy-duty wire staples at least 1 in. in length.

5. Backfill the trench with gravel or compacted earth all the way around.

- ***DI Protection Type 2 - Excavated Drop Inlet Sediment Trap*** - Install filter fabric fence in accordance with DI Protection Type 1. Size excavated trap to provide a minimum storage capacity calculated at the rate 67 yd^3/acre of drainage area. See typical Type 2 installation details at the end of this fact sheet.

- ***DI Protection Type 3 - Gravel bag*** - Flow from a severe storm should not overtop the curb. In areas of high clay and silts, use filter fabric and gravel as additional filter media. Construct gravel bags in accordance with SE-6, Gravel Bag Berm. Gravel bags should be used due to their high permeability. See typical Type 3 installation details at the end of this fact sheet.

  1. Construct on gently sloping street.
  2. Leave room upstream of barrier for water to pond and sediment to settle.
  3. Place several layers of gravel bags – overlapping the bags and packing them tightly together.
  4. Leave gap of one bag on the top row to serve as a spillway. Flow from a severe storm (e.g., 10 year storm) should not overtop the curb.

- ***DI Protection Type 4 – Block and Gravel Filter*** - Block and gravel filters are suitable for curb inlets commonly used in residential, commercial, and industrial construction. See typical Type 4 installation details at the end of this fact sheet.

  1. Place hardware cloth or comparable wire mesh with 0.5 in. openings over the drop inlet so that the wire extends a minimum of 1 ft beyond each side of the inlet structure. If more than one strip is necessary, overlap the strips. Place woven geotextile over the wire mesh.
  2. Place concrete blocks lengthwise on their sides in a single row around the perimeter of the inlet, so that the open ends face outward, not upward. The ends of adjacent blocks should abut. The height of the barrier can be varied, depending on design needs, by stacking combinations of blocks that are 4 in., 8 in., and 12 in. wide. The row of blocks should be at least 12 in. but no greater than 24 in. high.
  3. Place wire mesh over the outside vertical face (open end) of the concrete blocks to prevent stone from being washed through the blocks. Use hardware cloth or comparable wire mesh with 0.5 in. opening.
  4. Pile washed stone against the wire mesh to the top of the blocks. Use 0.75 to 3 in.

- ***DI Protection Type 5 – Temporary Geotextile Insert (proprietary)*** – Many types of temporary inserts are available. Most inserts fit underneath the grate of a drop inlet or inside of a curb inlet and are fastened to the outside of the grate or curb. These inserts are removable and many can be cleaned and reused. Installation of these inserts differs between manufacturers. Please refer to manufacturer instruction for installation of proprietary devices.

- ***DI Protection Type 6 - Biofilter bags*** – Biofilter bags may be used as a substitute for gravel bags in low-flow situations. Biofilter bags should conform to specifications detailed in SE-14, Biofilter bags.

  1. Construct in a gently sloping area.
  2. Biofilter bags should be placed around inlets to intercept runoff flows.
  3. All bag joints should overlap by 6 in.
  4. Leave room upstream for water to pond and for sediment to settle out.
  5. Stake bags to the ground as described in the following detail. Stakes may be omitted if bags are placed on a paved surface.

Costs

- Average annual cost for installation and maintenance of DI Type 1-4 and 6 (one year useful life) is $200 per inlet.
- Temporary geotextile inserts are proprietary and cost varies by region. These inserts can often be reused and may have greater than 1 year of use if maintained and kept undamaged. Average cost per insert ranges from $50-75 plus installation, but costs can exceed $100. This cost does not include maintenance.

Inspection and Maintenance

- BMPs must be inspected in accordance with General Permit requirements for the associated project type and risk level. It is recommended that at a minimum, BMPs be inspected weekly, prior to forecasted rain events, daily during extended rain events, and after the conclusion of rain events.
- Silt Fences. If the fabric becomes clogged, torn, or degrades, it should be replaced. Make sure the stakes are securely driven in the ground and are in good shape (i.e., not bent, cracked, or splintered, and are reasonably perpendicular to the ground). Replace damaged stakes. At a minimum, remove the sediment behind the fabric fence when accumulation reaches one-third the height of the fence or barrier height.
- Gravel Filters. If the gravel becomes clogged with sediment, it should be carefully removed from the inlet and either cleaned or replaced. Since cleaning gravel at a construction site may be difficult, consider using the sediment-laden stone as fill material and put fresh stone around the inlet. Inspect bags for holes, gashes, and snags, and replace bags as needed. Check gravel bags for proper arrangement and displacement.
- Sediment that accumulates in the BMP should be periodically removed in order to maintain BMP effectiveness. Sediment should be removed when the sediment accumulation reaches one-third of the barrier height.
- Inspect and maintain temporary geotextile insert devices according to manufacturer's specifications.
- Remove storm drain inlet protection once the drainage area is stabilized.

- Clean and regrade area around the inlet and clean the inside of the storm drain inlet, as it should be free of sediment and debris at the time of final inspection.

References

Stormwater Quality Handbooks - Construction Site Best Management Practices (BMPs) Manual, State of California Department of Transportation (Caltrans), March 2003.

Stormwater Management Manual for The Puget Sound Basin, Washington State Department of Ecology, Public Review Draft, 1991.

Erosion and Sediment Control Manual, Oregon Department of Environmental Quality, February 2005.

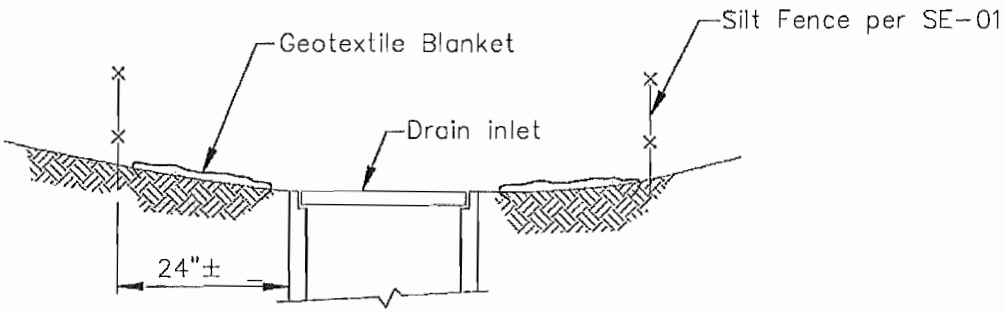

SECTION A–A

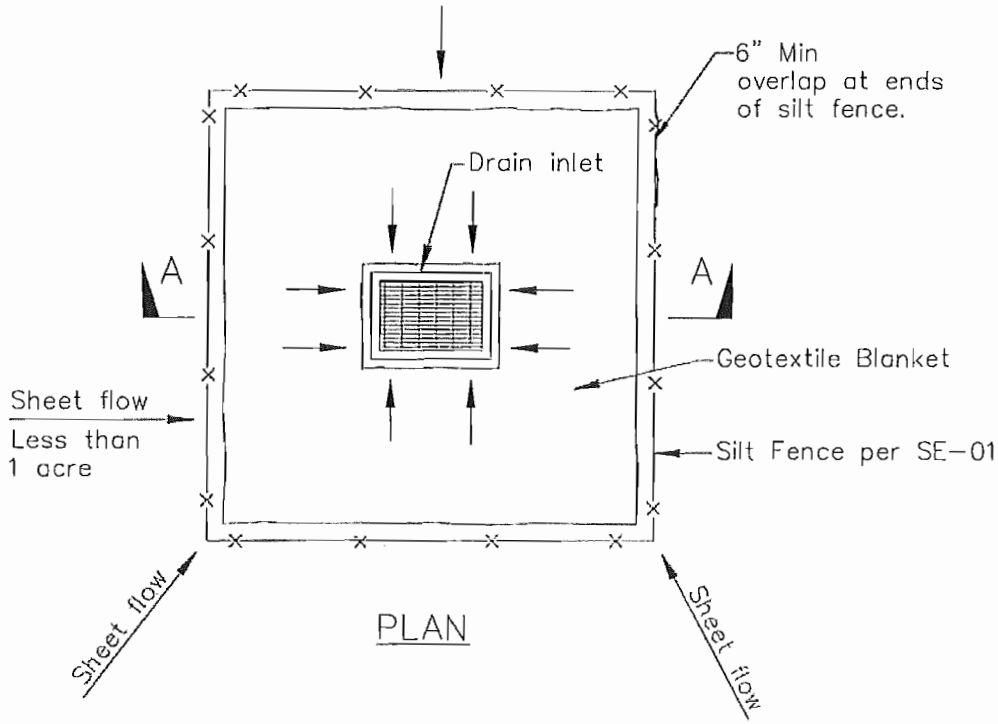

PLAN

DI PROTECTION TYPE 1
NOT TO SCALE

NOTES:

1. For use in areas where grading has been completed and final soil stabilization and seeding are pending.
2. Not applicable in paved areas.
3. Not applicable with concentrated flows.

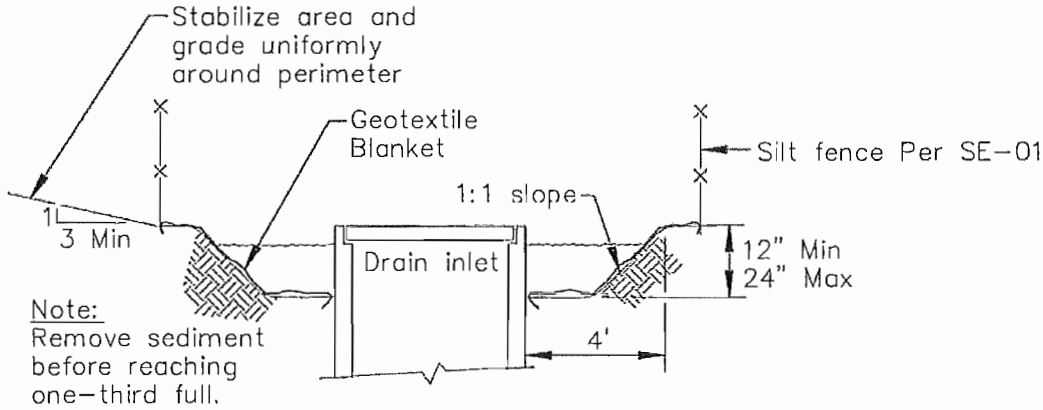

Section A–A

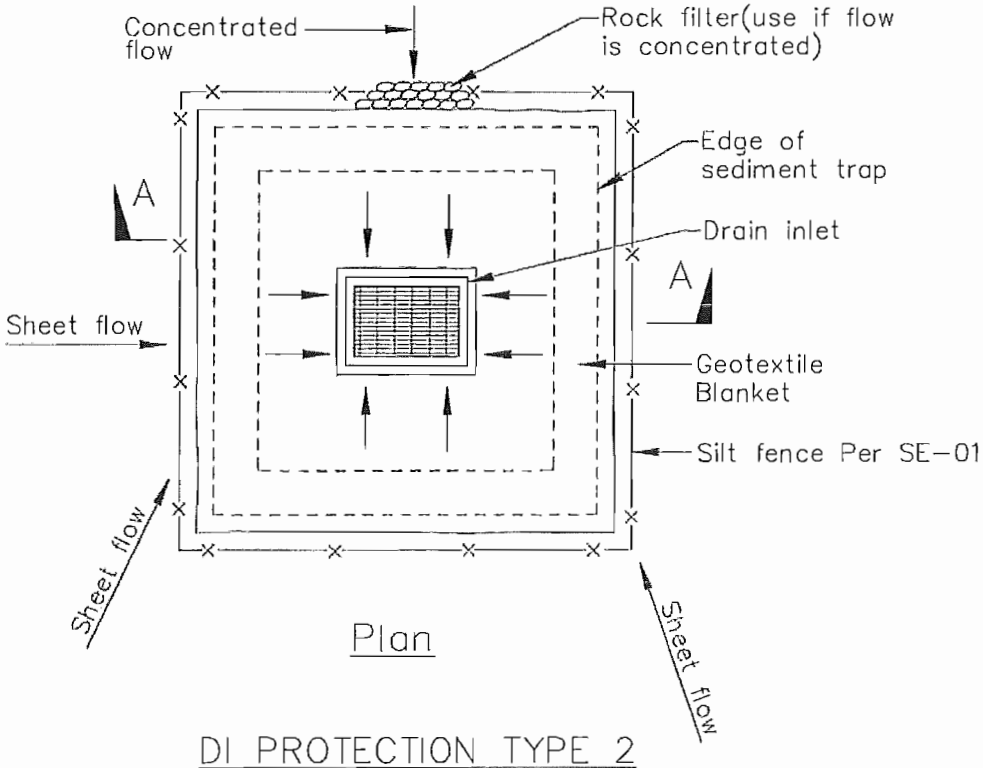

Plan

DI PROTECTION TYPE 2
NOT TO SCALE

Notes
1. For use in cleared and grubbed and in graded areas.
2. Shape basin so that longest inflow area faces longest length of trap.
3. For concentrated flows, shape basin in 2:1 ratio with length oriented towards direction of flow.

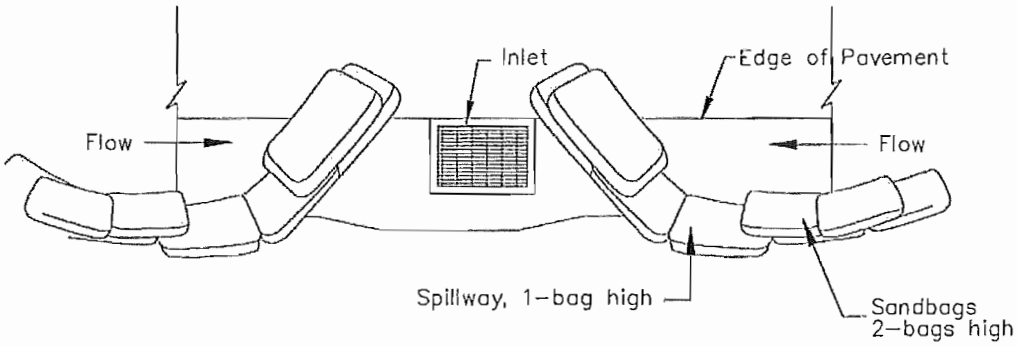

TYPICAL PROTECTION FOR INLET ON SUMP

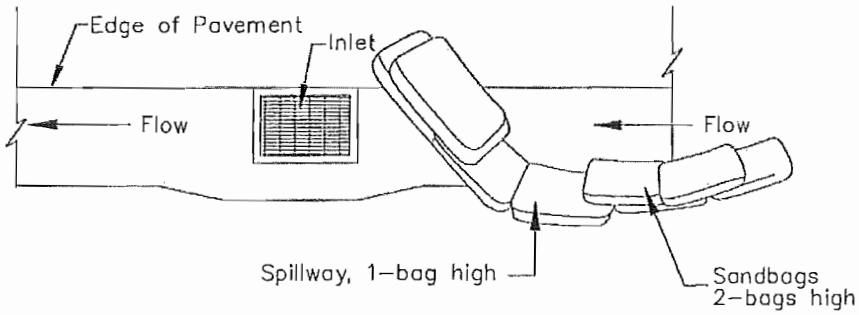

TYPICAL PROTECTION FOR INLET ON GRADE

NOTES:

1. Intended for short-term use.
2. Use to inhibit non-storm water flow.
3. Allow for proper maintenance and cleanup.
4. Bags must be removed after adjacent operation is completed
5. Not applicable in areas with high silts and clays without filter fabric.

DI PROTECTION TYPE 3
NOT TO SCALE

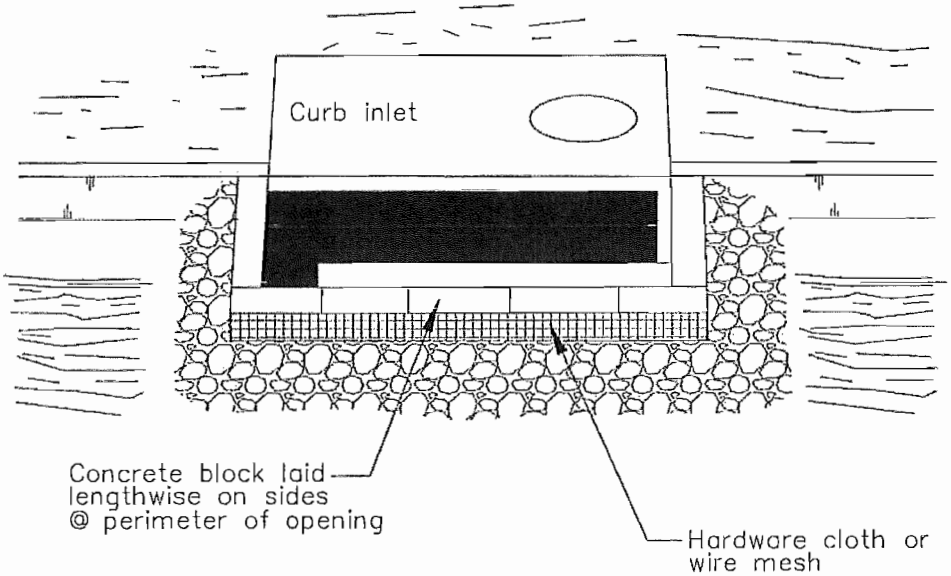

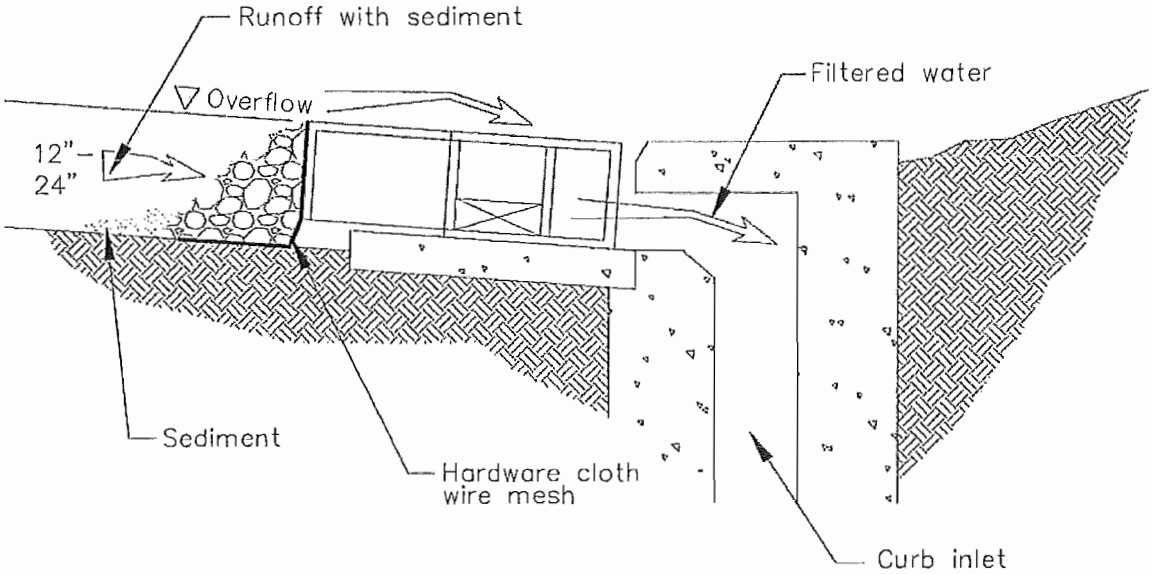

DI PROTECTION – TYPE 4

NOT TO SCALE

Stabilized Construction Entrance/Exit TC-1

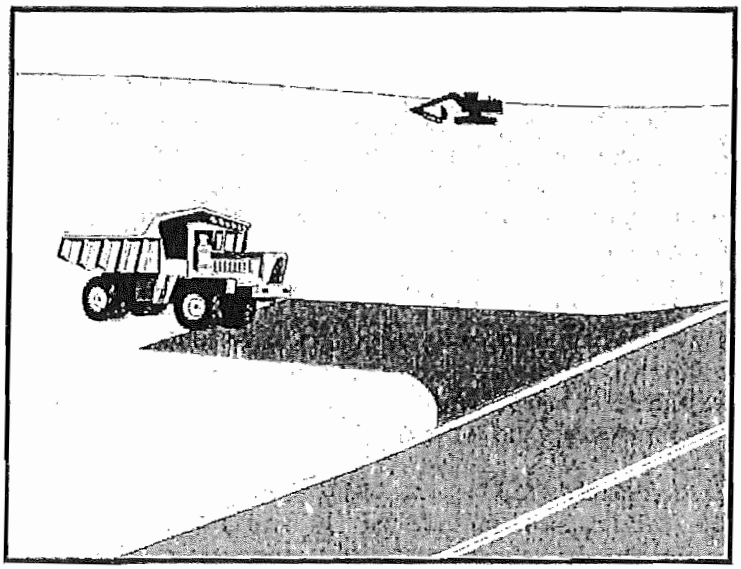

Categories

EC	Erosion Control	☒
SE	Sediment Control	☒
TC	Tracking Control	☑
WE	Wind Erosion Control	
NS	Non-Stormwater Management Control	
WM	Waste Management and Materials Pollution Control	

Legend:

☑ **Primary Objective**

☒ **Secondary Objective**

Targeted Constituents

Sediment	☑
Nutrients	
Trash	
Metals	
Bacteria	
Oil and Grease	
Organics	

Potential Alternatives

None

Description and Purpose

A stabilized construction access is defined by a point of entrance/exit to a construction site that is stabilized to reduce the tracking of mud and dirt onto public roads by construction vehicles.

Suitable Applications

Use at construction sites:

- Where dirt or mud can be tracked onto public roads.
- Adjacent to water bodies.
- Where poor soils are encountered.
- Where dust is a problem during dry weather conditions.

Limitations

- Entrances and exits require periodic top dressing with additional stones.
- This BMP should be used in conjunction with street sweeping on adjacent public right of way.
- Entrances and exits should be constructed on level ground only.
- Stabilized construction entrances are rather expensive to construct and when a wash rack is included, a sediment trap of some kind must also be provided to collect wash water runoff.

CASQA
CALIFORNIA STORMWATER

Stabilized Construction Entrance/Exit TC-1

Implementation

General

A stabilized construction entrance is a pad of aggregate underlain with filter cloth located at any point where traffic will be entering or leaving a construction site to or from a public right of way, street, alley, sidewalk, or parking area. The purpose of a stabilized construction entrance is to reduce or eliminate the tracking of sediment onto public rights of way or streets. Reducing tracking of sediments and other pollutants onto paved roads helps prevent deposition of sediments into local storm drains and production of airborne dust.

Where traffic will be entering or leaving the construction site, a stabilized construction entrance should be used. NPDES permits require that appropriate measures be implemented to prevent tracking of sediments onto paved roadways, where a significant source of sediments is derived from mud and dirt carried out from unpaved roads and construction sites.

Stabilized construction entrances are moderately effective in removing sediment from equipment leaving a construction site. The entrance should be built on level ground. Advantages of the Stabilized Construction Entrance/Exit is that it does remove some sediment from equipment and serves to channel construction traffic in and out of the site at specified locations. Efficiency is greatly increased when a washing rack is included as part of a stabilized construction entrance/exit.

Design and Layout

- Construct on level ground where possible.
- Select 3 to 6 in. diameter stones.
- Use minimum depth of stones of 12 in. or as recommended by soils engineer.
- Construct length of 50 ft or maximum site will allow, and 10 ft minimum width or to accommodate traffic.
- Rumble racks constructed of steel panels with ridges and installed in the stabilized entrance/exit will help remove additional sediment and to keep adjacent streets clean.
- Provide ample turning radii as part of the entrance.
- Limit the points of entrance/exit to the construction site.
- Limit speed of vehicles to control dust.
- Properly grade each construction entrance/exit to prevent runoff from leaving the construction site.
- Route runoff from stabilized entrances/exits through a sediment trapping device before discharge.
- Design stabilized entrance/exit to support heaviest vehicles and equipment that will use it.

- Select construction access stabilization (aggregate, asphaltic concrete, concrete) based on longevity, required performance, and site conditions. Do not use asphalt concrete (AC) grindings for stabilized construction access/roadway.
- If aggregate is selected, place crushed aggregate over geotextile fabric to at least 12 in. depth, or place aggregate to a depth recommended by a geotechnical engineer. A crushed aggregate greater than 3 in. but smaller than 6 in. should be used.
- Designate combination or single purpose entrances and exits to the construction site.
- Require that all employees, subcontractors, and suppliers utilize the stabilized construction access.
- Implement SE-7, Street Sweeping and Vacuuming, as needed.
- All exit locations intended to be used for more than a two-week period should have stabilized construction entrance/exit BMPs.

Inspection and Maintenance

- Inspect and verify that activity–based BMPs are in place prior to the commencement of associated activities. While activities associated with the BMPs are under way, inspect BMPs in accordance with General Permit requirements for the associated project type and risk level. It is recommended that at a minimum, BMPs be inspected weekly, prior to forecasted rain events, daily during extended rain events, and after the conclusion of rain events.
- Inspect local roads adjacent to the site daily. Sweep or vacuum to remove visible accumulated sediment.
- Remove aggregate, separate and dispose of sediment if construction entrance/exit is clogged with sediment.
- Keep all temporary roadway ditches clear.
- Check for damage and repair as needed.
- Replace gravel material when surface voids are visible.
- Remove all sediment deposited on paved roadways within 24 hours.
- Remove gravel and filter fabric at completion of construction

Costs

Average annual cost for installation and maintenance may vary from $1,200 to $4,800 each, averaging $2,400 per entrance. Costs will increase with addition of washing rack, and sediment trap. With wash rack, costs range from $1,200 - $6,000 each, averaging $3,600 per entrance.

References

Manual of Standards of Erosion and Sediment Control Measures, Association of Bay Area Governments, May 1995.

National Management Measures to Control Nonpoint Source Pollution from Urban Areas, USEPA Agency, 2002.

Proposed Guidance Specifying Management Measures for Sources of Nonpoint Pollution in Coastal Waters, Work Group Working Paper, USEPA, April 1992.

Stormwater Quality Handbooks Construction Site Best Management Practices (BMPs) Manual, State of California Department of Transportation (Caltrans), November 2000.

Stormwater Management of the Puget Sound Basin, Technical Manual, Publication #91-75, Washington State Department of Ecology, February 1992.

Virginia Erosion and Sedimentation Control Handbook, Virginia Department of Conservation and Recreation, Division of Soil and Water Conservation, 1991.

Guidance Specifying Management Measures for Nonpoint Pollution in Coastal Waters, EPA 840-B-9-002, USEPA, Office of Water, Washington, DC, 1993.

Water Quality Management Plan for the Lake Tahoe Region, Volume II, Handbook of Management Practices, Tahoe Regional Planning Agency, November 1988.

Stabilized Construction Entrance/Exit TC-1

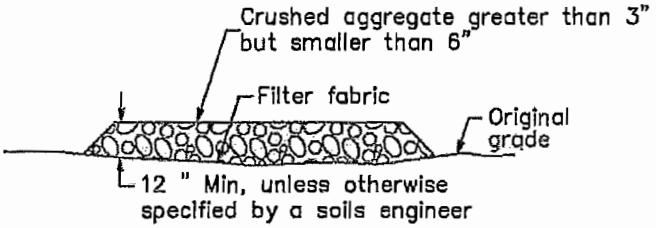

SECTION B–B
NTS

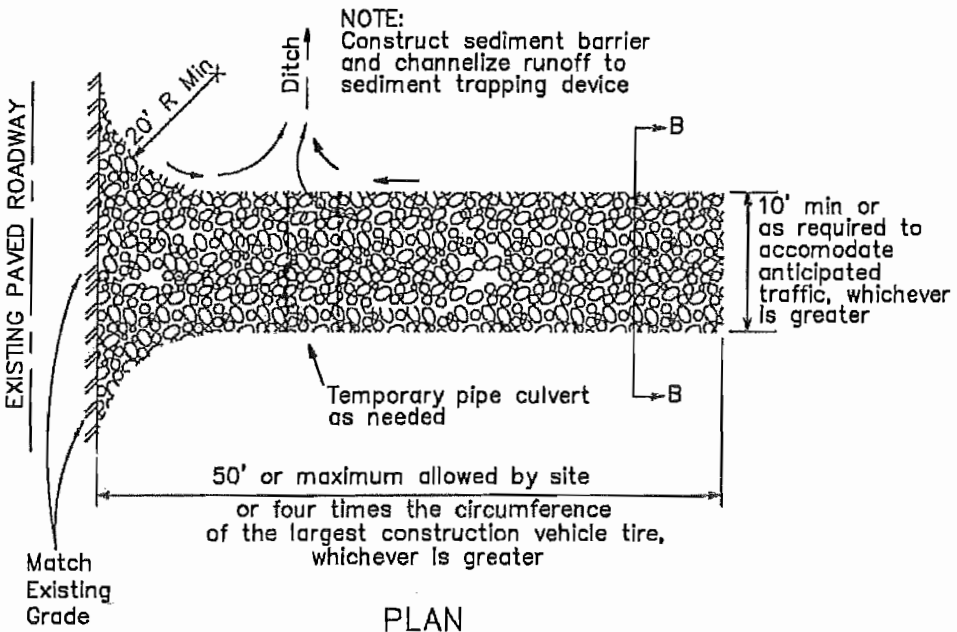

PLAN
NTS

Stabilized Construction Entrance/Exit TC-1

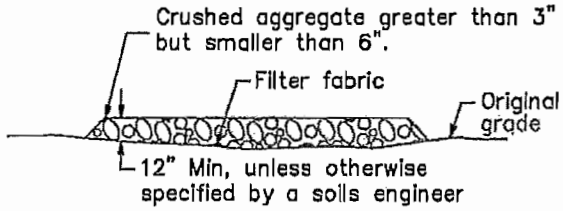

SECTION B–B
NTS

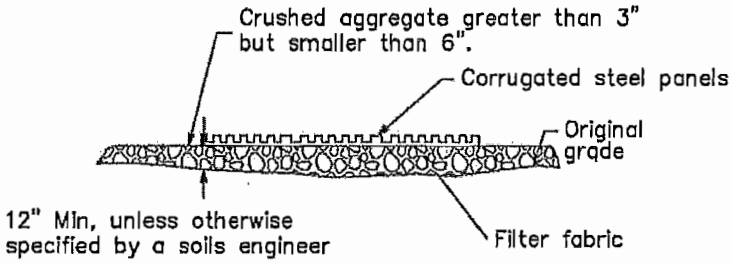

SECTION A–A
NOT TO SCALE

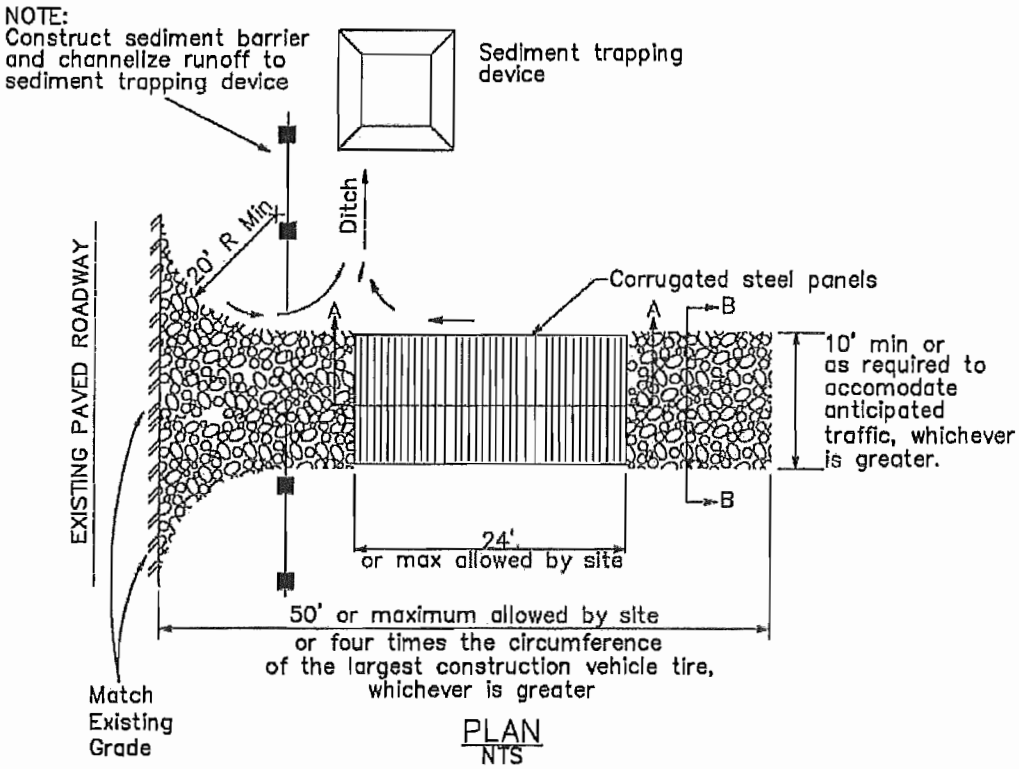

PLAN
NTS

Stabilized Construction Roadway TC-2

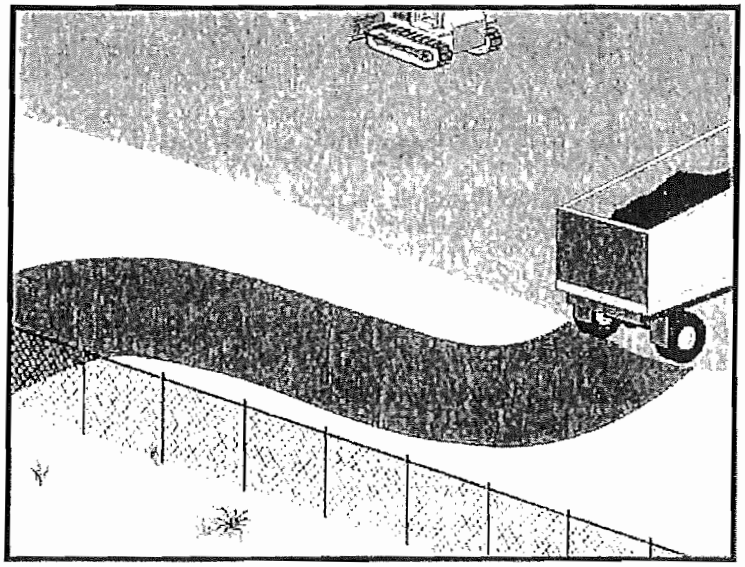

Categories		
EC	Erosion Control	☒
SE	Sediment Control	☒
TC	Tracking Control	☑
WE	Wind Erosion Control	
NS	Non-Stormwater Management Control	
WM	Waste Management and Materials Pollution Control	

Legend:

☑ **Primary Objective**

☒ **Secondary Objective**

Targeted Constituents	
Sediment	☑
Nutrients	
Trash	
Metals	
Bacteria	
Oil and Grease	
Organics	

Potential Alternatives

None

Description and Purpose

Access roads, subdivision roads, parking areas, and other onsite vehicle transportation routes should be stabilized immediately after grading, and frequently maintained to prevent erosion and control dust.

Suitable Applications

This BMP should be applied for the following conditions:

- Temporary Construction Traffic:
  - Phased construction projects and offsite road access
  - Construction during wet weather
- Construction roadways and detour roads:
  - Where mud tracking is a problem during wet weather
  - Where dust is a problem during dry weather
  - Adjacent to water bodies
  - Where poor soils are encountered

Limitations

- The roadway must be removed or paved when construction is complete.
- Certain chemical stabilization methods may cause stormwater or soil pollution and should not be used. See WE-1, Wind Erosion Control.

CASQA
CALIFORNIA STORMWATER QUALITY ASSOCIATION

- Management of construction traffic is subject to air quality control measures. Contact the local air quality management agency.
- Materials will likely need to be removed prior to final project grading and stabilization.
- Use of this BMP may not be applicable to very short duration projects.

Implementation

General

Areas that are graded for construction vehicle transport and parking purposes are especially susceptible to erosion and dust. The exposed soil surface is continually disturbed, leaving no opportunity for vegetative stabilization. Such areas also tend to collect and transport runoff waters along their surfaces. During wet weather, they often become muddy quagmires that generate significant quantities of sediment that may pollute nearby streams or be transported offsite on the wheels of construction vehicles. Dirt roads can become so unstable during wet weather that they are virtually unusable.

Efficient construction road stabilization not only reduces onsite erosion but also can significantly speed onsite work, avoid instances of immobilized machinery and delivery vehicles, and generally improve site efficiency and working conditions during adverse weather

Installation/Application Criteria

Permanent roads and parking areas should be paved as soon as possible after grading. As an alternative where construction will be phased, the early application of gravel or chemical stabilization may solve potential erosion and stability problems. Temporary gravel roadway should be considered during the rainy season and on slopes greater than 5%.

Temporary roads should follow the contour of the natural terrain to the maximum extent possible. Slope should not exceed 15%. Roadways should be carefully graded to drain transversely. Provide drainage swales on each side of the roadway in the case of a crowned section or one side in the case of a super elevated section. Simple gravel berms without a trench can also be used.

Installed inlets should be protected to prevent sediment laden water from entering the storm sewer system (SE-10, Storm Drain Inlet Protection). In addition, the following criteria should be considered.

- Road should follow topographic contours to reduce erosion of the roadway.
- The roadway slope should not exceed 15%.
- Chemical stabilizers or water are usually required on gravel or dirt roads to prevent dust (WE-1, Wind Erosion Control).
- Properly grade roadway to prevent runoff from leaving the construction site.
- Design stabilized access to support heaviest vehicles and equipment that will use it.

- Stabilize roadway using aggregate, asphalt concrete, or concrete based on longevity, required performance, and site conditions. The use of cold mix asphalt or asphalt concrete (AC) grindings for stabilized construction roadway is not allowed.
- Coordinate materials with those used for stabilized construction entrance/exit points.
- If aggregate is selected, place crushed aggregate over geotextile fabric to at least 12 in. depth. A crushed aggregate greater than 3 in. but smaller than 6 in. should be used.

Inspection and Maintenance

- Inspect and verify that activity–based BMPs are in place prior to the commencement of associated activities. While activities associated with the BMP are under way, inspect BMPs in accordance with General Permit requirements for the associated project type and risk level. It is recommended that at a minimum, BMPs be inspected weekly, prior to forecasted rain events, daily during extended rain events, and after the conclusion of rain events.
- Keep all temporary roadway ditches clear.
- When no longer required, remove stabilized construction roadway and re-grade and repair slopes.
- Periodically apply additional aggregate on gravel roads.
- Active dirt construction roads are commonly watered three or more times per day during the dry season.

Costs

Gravel construction roads are moderately expensive, but cost is often balanced by reductions in construction delay. No additional costs for dust control on construction roads should be required above that needed to meet local air quality requirements.

References

Blueprint for a Clean Bay: Best Management Practices to Prevent Stormwater Pollution from Construction Related Activities; Santa Clara Valley Nonpoint Source Pollution Control Program, 1995.

Coastal Nonpoint Pollution Control Program; Program Development and Approval Guidance, Working Group, Working Paper; USEPA, April 1992.

Manual of Standards of Erosion and Sediment Control Measures, Association of Bay Area Governments, May 1995.

Stormwater Quality Handbooks Construction Site Best Management Practices (BMPs) Manual, State of California Department of Transportation (Caltrans), November 2000.

Stormwater Management for Construction Activities, Developing Pollution Prevention Plans and Best Management Practices, EPA 832-R-92005; USEPA, April 1992.

Stormwater Management of the Puget Sound Basin, Technical Manual, Publication #91-75, Washington State Department of Ecology, February 1992.

Virginia Erosion and Sedimentation Control Handbook, Virginia Department of Conservation and Recreation, Division of Soil and Water Conservation, 1991.

Water Quality Management Plan for the Lake Tahoe Region, Volume II, Handbook of Management Practices, Tahoe Regional Planning Agency, November 1988.

Entrance/Outlet Tire Wash TC-3

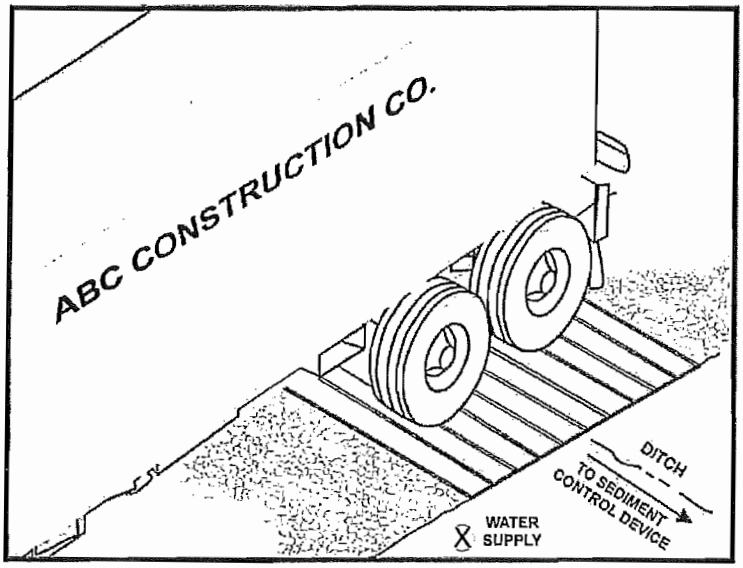

Categories

EC	Erosion Control	
SE	Sediment Control	☒
TC	Tracking Control	☑
WE	Wind Erosion Control	
NS	Non-Stormwater Management Control	
WM	Waste Management and Materials Pollution Control	

Legend:

☑ **Primary Objective**

☒ **Secondary Objective**

Targeted Constituents

Sediment	☑
Nutrients	
Trash	
Metals	
Bacteria	
Oil and Grease	
Organics	

Potential Alternatives

TC-1 Stabilized Construction Entrance/Exit

Description and Purpose

A tire wash is an area located at stabilized construction access points to remove sediment from tires and under carriages and to prevent sediment from being transported onto public roadways.

Suitable Applications

Tire washes may be used on construction sites where dirt and mud tracking onto public roads by construction vehicles may occur.

Limitations

- The tire wash requires a supply of wash water.
- A turnout or doublewide exit is required to avoid having entering vehicles drive through the wash area.
- Do not use where wet tire trucks leaving the site leave the road dangerously slick.

Implementation

- Incorporate with a stabilized construction entrance/exit. See TC-1, Stabilized Construction Entrance/Exit.
- Construct on level ground when possible, on a pad of coarse aggregate greater than 3 in. but smaller than 6 in. A geotextile fabric should be placed below the aggregate.
- Wash rack should be designed and constructed/manufactured for anticipated traffic loads.

CASQA
CALIFORNIA STORMWATER

- Provide a drainage ditch that will convey the runoff from the wash area to a sediment trapping device. The drainage ditch should be of sufficient grade, width, and depth to carry the wash runoff.
- Use hoses with automatic shutoff nozzles to prevent hoses from being left on.
- Require that all employees, subcontractors, and others that leave the site with mud caked tires and undercarriages to use the wash facility.
- Implement SC-7, Street Sweeping and Vacuuming, as needed.

Costs

Costs are low for installation of wash rack.

Inspection and Maintenance

- Inspect and verify that activity–based BMPs are in place prior to the commencement of associated activities. While activities associated with the BMP are under way, inspect BMPs in accordance with General Permit requirements for the associated project type and risk level. It is recommended that at a minimum, BMPs be inspected weekly, prior to forecasted rain events, daily during extended rain events, and after the conclusion of rain events.
- Inspect BMPs subject to non-stormwater discharge daily while non-stormwater discharges occur.
- Remove accumulated sediment in wash rack and/or sediment trap to maintain system performance.
- Inspect routinely for damage and repair as needed.

References

Blueprint for a Clean Bay: Best Management Practices to Prevent Stormwater Pollution from Construction Related Activities; Santa Clara Valley Nonpoint Source Pollution Control Program, 1995.

Coastal Nonpoint Pollution Control Program; Program Development and Approval Guidance, Working Group, Working Paper; USEPA, April 1992.

Manual of Standards of Erosion and Sediment Control Measures, Association of Bay Area Governments, May 1995.

Stormwater Quality Handbooks Construction Site Best Management Practices (BMPs) Manual, State of California Department of Transportation (Caltrans), November 2000.

Stormwater Management for Construction Activities, Developing Pollution Prevention Plans and Best Management Practices, EPA 832-R-92005; USEPA, April 1992.

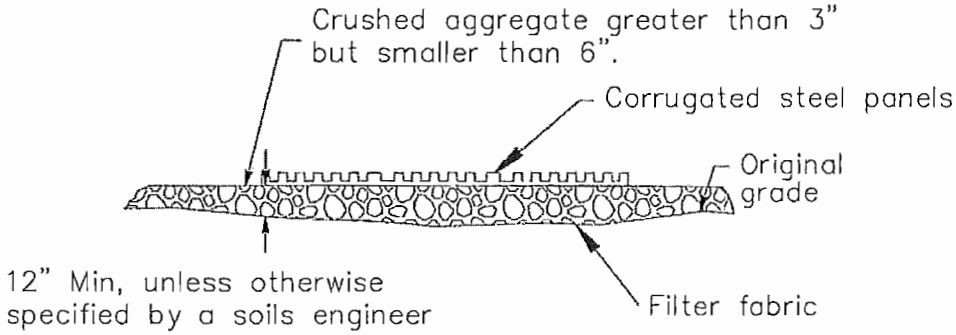

SECTION A–A
NOT TO SCALE

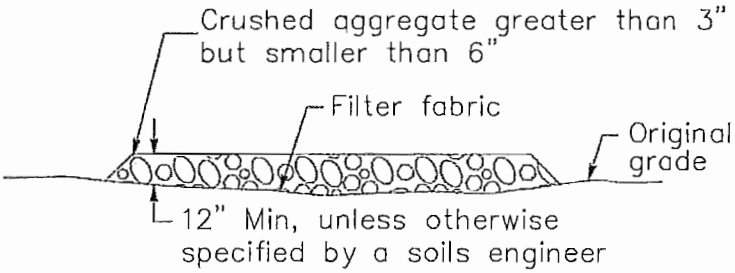

SECTION B–B
NTS

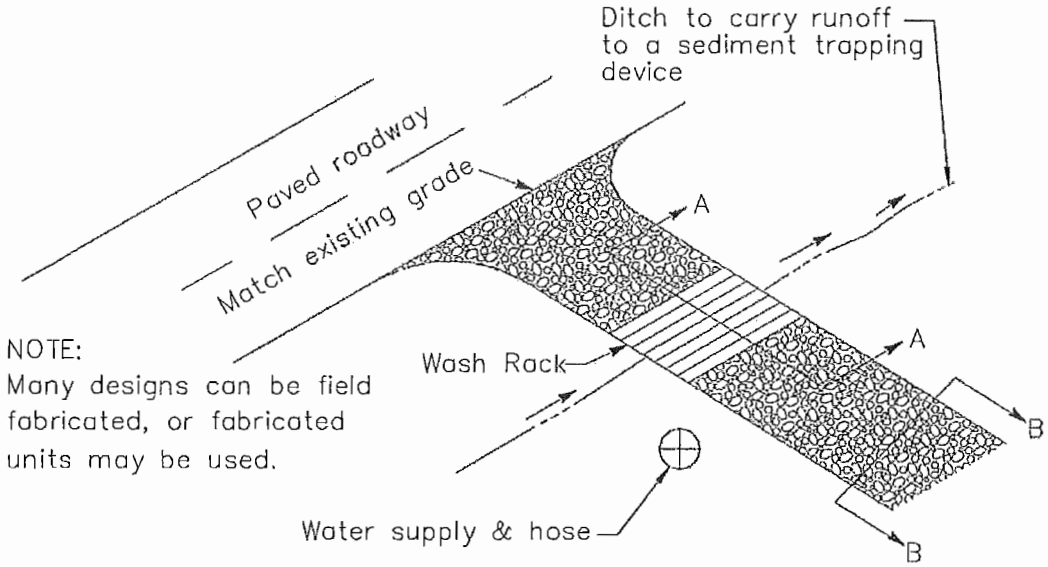

NOTE:
Many designs can be field fabricated, or fabricated units may be used.

TYPICAL TIRE WASH
NOT TO SCALE

Wind Erosion Control WE-1

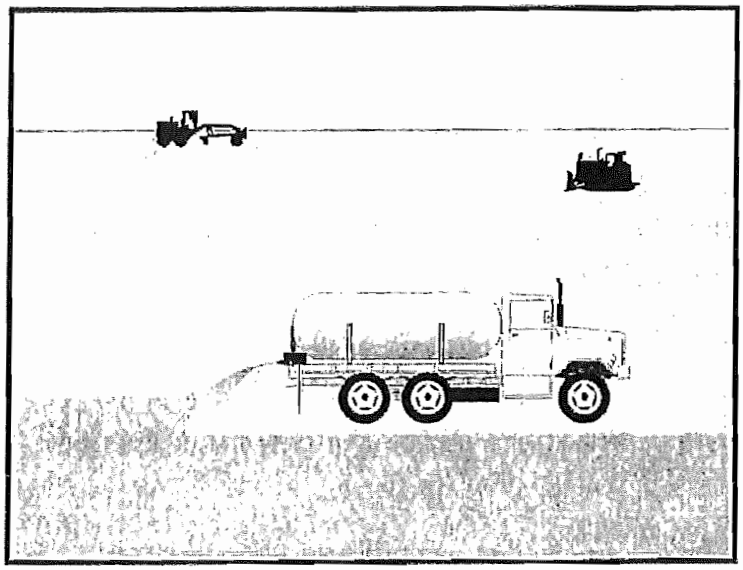

Categories

EC	Erosion Control	
SE	Sediment Control	☒
TC	Tracking Control	
WE	Wind Erosion Control	☑
NS	Non-Stormwater Management Control	
WM	Waste Management and Materials Pollution Control	

Legend:

☑ **Primary Category**

☒ **Secondary Category**

Targeted Constituents

Sediment	☑
Nutrients	
Trash	
Metals	
Bacteria	
Oil and Grease	
Organics	

Potential Alternatives

EC-5 Soil Binders

Description and Purpose

Wind erosion or dust control consists of applying water or other chemical dust suppressants as necessary to prevent or alleviate dust nuisance generated by construction activities. Covering small stockpiles or areas is an alternative to applying water or other dust palliatives.

California's Mediterranean climate, with a short "wet" season and a typically long, hot "dry" season, allows the soils to thoroughly dry out. During the dry season, construction activities are at their peak, and disturbed and exposed areas are increasingly subject to wind erosion, sediment tracking and dust generated by construction equipment. Site conditions and climate can make dust control more of an erosion problem than water based erosion. Additionally, many local agencies, including Air Quality Management Districts, require dust control and/or dust control permits in order to comply with local nuisance laws, opacity laws (visibility impairment) and the requirements of the Clean Air Act. Wind erosion control is required to be implemented at all construction sites greater than 1 acre by the General Permit.

Suitable Applications

Most BMPs that provide protection against water-based erosion will also protect against wind-based erosion and dust control requirements required by other agencies will generally meet wind erosion control requirements for water quality protection. Wind erosion control BMPs are suitable during the following construction activities:

CASQA
CALIFORNIA STORMWATER QUALITY ASSOCIATION

- Construction vehicle traffic on unpaved roads
- Drilling and blasting activities
- Soils and debris storage piles
- Batch drop from front-end loaders
- Areas with unstabilized soil
- Final grading/site stabilization

Limitations

- Watering prevents dust only for a short period (generally less than a few hours) and should be applied daily (or more often) to be effective.
- Over watering may cause erosion and track-out.
- Oil or oil-treated subgrade should not be used for dust control because the oil may migrate into drainageways and/or seep into the soil.
- Chemical dust suppression agents may have potential environmental impacts. Selected chemical dust control agents should be environmentally benign.
- Effectiveness of controls depends on soil, temperature, humidity, wind velocity and traffic.
- Chemical dust suppression agents should not be used within 100 feet of wetlands or water bodies.
- Chemically treated subgrades may make the soil water repellant, interfering with long-term infiltration and the vegetation/re-vegetation of the site. Some chemical dust suppressants may be subject to freezing and may contain solvents and should be handled properly.
- In compacted areas, watering and other liquid dust control measures may wash sediment or other constituents into the drainage system.
- If the soil surface has minimal natural moisture, the affected area may need to be pre-wetted so that chemical dust control agents can uniformly penetrate the soil surface.

Implementation

Dust Control Practices

Dust control BMPs generally stabilize exposed surfaces and minimize activities that suspend or track dust particles. The following table presents dust control practices that can be applied to varying site conditions that could potentially cause dust. For heavily traveled and disturbed areas, wet suppression (watering), chemical dust suppression, gravel asphalt surfacing, temporary gravel construction entrances, equipment wash-out areas, and haul truck covers can be employed as dust control applications. Permanent or temporary vegetation and mulching can be employed for areas of occasional or no construction traffic. Preventive measures include minimizing surface areas to be disturbed, limiting onsite vehicle traffic to 15 mph or less, and controlling the number and activity of vehicles on a site at any given time.

Chemical dust suppressants include: mulch and fiber based dust palliatives (e.g. paper mulch with gypsum binder), salts and brines (e.g. calcium chloride, magnesium chloride), non-petroleum based organics (e.g. vegetable oil, lignosulfonate), petroleum based organics (e.g. asphalt emulsion, dust oils, petroleum resins), synthetic polymers (e.g. polyvinyl acetate, vinyls, acrylic), clay additives (e.g. bentonite, montimorillonite) and electrochemical products (e.g. enzymes, ionic products).

Site Condition	Dust Control Practices							
	Permanent Vegetation	Mulching	Wet Suppression (Watering)	Chemical Dust Suppression	Gravel or Asphalt	Temporary Gravel Construction Entrances/Equipment Wash Down	Synthetic Covers	Minimize Extent of Disturbed Area
Disturbed Areas not Subject to Traffic	X	X	X	X	X			X
Disturbed Areas Subject to Traffic			X	X	X	X		X
Material Stockpiles		X	X	X			X	X
Demolition			X			X	X	
Clearing/ Excavation			X	X				X
Truck Traffic on Unpaved Roads			X	X	X	X	X	
Tracking					X	X		

Additional preventive measures include:

- Schedule construction activities to minimize exposed area (see EC-1, Scheduling).
- Quickly treat exposed soils using water, mulching, chemical dust suppressants, or stone/gravel layering.
- Identify and stabilize key access points prior to commencement of construction.
- Minimize the impact of dust by anticipating the direction of prevailing winds.
- Restrict construction traffic to stabilized roadways within the project site, as practicable.
- Water should be applied by means of pressure-type distributors or pipelines equipped with a spray system or hoses and nozzles that will ensure even distribution.
- All distribution equipment should be equipped with a positive means of shutoff.
- Unless water is applied by means of pipelines, at least one mobile unit should be available at all times to apply water or dust palliative to the project.
- If reclaimed waste water is used, the sources and discharge must meet California Department of Health Services water reclamation criteria and the Regional Water Quality

Control Board (RWQCB) requirements. Non-potable water should not be conveyed in tanks or drain pipes that will be used to convey potable water and there should be no connection between potable and non-potable supplies. Non-potable tanks, pipes, and other conveyances should be marked, "NON-POTABLE WATER - DO NOT DRINK."

- Pave or chemically stabilize access points where unpaved traffic surfaces adjoin paved roads.
- Provide covers for haul trucks transporting materials that contribute to dust.
- Provide for rapid clean up of sediments deposited on paved roads. Furnish stabilized construction road entrances and wheel wash areas.
- Stabilize inactive areas of construction sites using temporary vegetation or chemical stabilization methods.

For chemical stabilization, there are many products available for chemically stabilizing gravel roadways and stockpiles. If chemical stabilization is used, the chemicals should not create any adverse effects on stormwater, plant life, or groundwater and should meet all applicable regulatory requirements.

Costs

Installation costs for water and chemical dust suppression vary based on the method used and the length of effectiveness. Annual costs may be high since some of these measures are effective for only a few hours to a few days.

Inspection and Maintenance

- Inspect and verify that activity-based BMPs are in place prior to the commencement of associated activities.
- BMPs must be inspected in accordance with General Permit requirements for the associated project type and risk level. It is recommended that at a minimum, BMPs be inspected weekly, prior to forecasted rain events, daily during extended rain events, and after the conclusion of rain events.
- Check areas protected to ensure coverage.
- Most water-based dust control measures require frequent application, often daily or even multiple times per day. Obtain vendor or independent information on longevity of chemical dust suppressants.

References

Best Management Practices and Erosion Control Manual for Construction Sites, Flood Control District of Maricopa County, Arizona, September 1992.

California Air Pollution Control Laws, California Air Resources Board, updated annually.

Construction Manual, Chapter 4, Section 10, "Dust Control"; Section 17, "Watering"; and Section 18, "Dust Palliative", California Department of Transportation (Caltrans), July 2001.

Prospects for Attaining the State Ambient Air Quality Standards for Suspended Particulate Matter (PM10), Visibility Reducing Particles, Sulfates, Lead, and Hydrogen Sulfide, California Air Resources Board, April 1991.

Stormwater Quality Handbooks Construction Site Best Management Practices (BMPs) Manual, State of California Department of Transportation (Caltrans), March 2003.

Water Conservation Practices NS-1

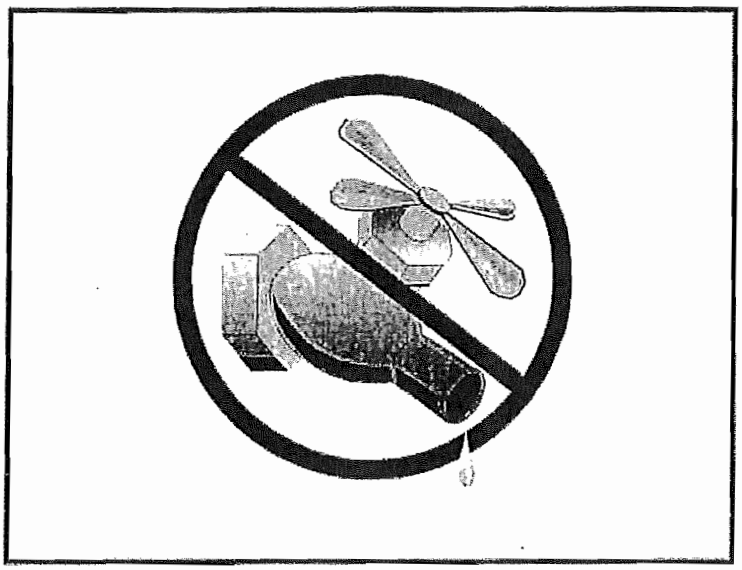

Categories		
EC	Erosion Control	☒
SE	Sediment Control	☒
TC	Tracking Control	
WE	Wind Erosion Control	
NS	Non-Stormwater Management Control	☑
WM	Waste Management and Materials Pollution Control	

Legend:
☑ **Primary Objective**
☒ **Secondary Objective**

Targeted Constituents	
Sediment	☑
Nutrients	
Trash	
Metals	
Bacteria	
Oil and Grease	
Organics	

Potential Alternatives

None

Description and Purpose

Water conservation practices are activities that use water during the construction of a project in a manner that avoids causing erosion and the transport of pollutants offsite. These practices can reduce or eliminate non-stormwater discharges.

Suitable Applications

Water conservation practices are suitable for all construction sites where water is used, including piped water, metered water, trucked water, and water from a reservoir.

Limitations

- None identified.

Implementation

- Keep water equipment in good working condition.
- Stabilize water truck filling area.
- Repair water leaks promptly.
- Washing of vehicles and equipment on the construction site is discouraged.
- Avoid using water to clean construction areas. If water must be used for cleaning or surface preparation, surface should be swept and vacuumed first to remove dirt. This will minimize amount of water required.
- Direct construction water runoff to areas where it can soak

CASQA
CALIFORNIA STORMWATER QUALITY ASSOCIATION

into the ground or be collected and reused.

- Authorized non-stormwater discharges to the storm drain system, channels, or receiving waters are acceptable with the implementation of appropriate BMPs.
- Lock water tank valves to prevent unauthorized use.

Costs

The cost is small to none compared to the benefits of conserving water.

Inspection and Maintenance

- Inspect and verify that activity based BMPs are in place prior to the commencement of authorized non-stormwater discharges.
- Inspect BMPs in accordance with General Permit requirements for the associated project type and risk level. It is recommended that at a minimum, BMPs be inspected weekly, prior to forecasted rain events, daily during extended rain events, and after the conclusion of rain events.
- Inspect BMPs subject to non-stormwater discharges daily while non-stormwater discharges are occuring.
- Repair water equipment as needed to prevent unintended discharges.
  - Water trucks
  - Water reservoirs (water buffalos)
  - Irrigation systems
  - Hydrant connections

References

Stormwater Quality Handbooks - Construction Site Best Management Practices (BMPs) Manual, State of California Department of Transportation (Caltrans), November 2000.

Illicit Connection/Discharge NS-6

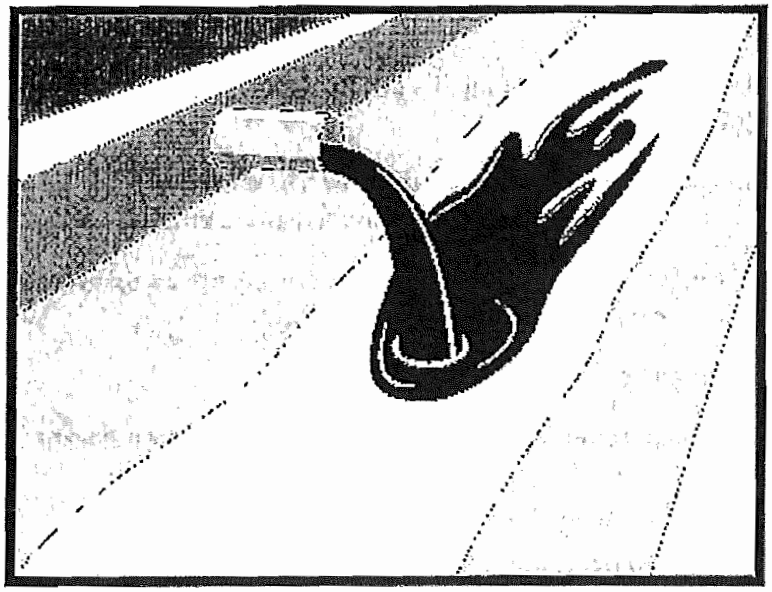

Categories		
EC	Erosion Control	
SE	Sediment Control	
TC	Tracking Control	
WE	Wind Erosion Control	
NS	Non-Stormwater Management Control	☑
WM	Waste Management and Materials Pollution Control	

Legend:

☑ **Primary Objective**

☒ **Secondary Objective**

Targeted Constituents	
Sediment	
Nutrients	☑
Trash	☑
Metals	☑
Bacteria	☑
Oil and Grease	☑
Organics	☑

Potential Alternatives

None

Description and Purpose

Procedures and practices designed for construction contractors to recognize illicit connections or illegally dumped or discharged materials on a construction site and report incidents.

Suitable Applications

This best management practice (BMP) applies to all construction projects. Illicit connection/discharge and reporting is applicable anytime an illicit connection or discharge is discovered or illegally dumped material is found on the construction site.

Limitations

Illicit connections and illegal discharges or dumping, for the purposes of this BMP, refer to discharges and dumping caused by parties other than the contractor. If pre-existing hazardous materials or wastes are known to exist onsite, they should be identified in the SWPPP and handled as set forth in the SWPPP.

Implementation

Planning

- Review the SWPPP. Pre-existing areas of contamination should be identified and documented in the SWPPP.
- Inspect site before beginning the job for evidence of illicit connections, illegal dumping or discharges. Document any pre-existing conditions and notify the owner.
- Inspect site regularly during project execution for evidence

CASQA
CALIFORNIA STORMWATER QUALITY ASSOCIATIONS

of illicit connections, illegal dumping or discharges.

- Observe site perimeter for evidence for potential of illicitly discharged or illegally dumped material, which may enter the job site.

Identification of Illicit Connections and Illegal Dumping or Discharges

- **General** – unlabeled and unidentifiable material should be treated as hazardous.
- **Solids** - Look for debris, or rubbish piles. Solid waste dumping often occurs on roadways with light traffic loads or in areas not easily visible from the traveled way.
- **Liquids** - signs of illegal liquid dumping or discharge can include:
  - Visible signs of staining or unusual colors to the pavement or surrounding adjacent soils
  - Pungent odors coming from the drainage systems
  - Discoloration or oily substances in the water or stains and residues detained within ditches, channels or drain boxes
  - Abnormal water flow during the dry weather season
- **Urban Areas** - Evidence of illicit connections or illegal discharges is typically detected at storm drain outfall locations or at manholes. Signs of an illicit connection or illegal discharge can include:
  - Abnormal water flow during the dry weather season
  - Unusual flows in sub drain systems used for dewatering
  - Pungent odors coming from the drainage systems
  - Discoloration or oily substances in the water or stains and residues detained within ditches, channels or drain boxes
  - Excessive sediment deposits, particularly adjacent to or near active offsite construction projects
- **Rural Areas** - Illicit connections or illegal discharges involving irrigation drainage ditches are detected by visual inspections. Signs of an illicit discharge can include:
  - Abnormal water flow during the non-irrigation season
  - Non-standard junction structures
  - Broken concrete or other disturbances at or near junction structures

Reporting

Notify the owner of any illicit connections and illegal dumping or discharge incidents at the time of discovery. For illicit connections or discharges to the storm drain system, notify the local stormwater management agency. For illegal dumping, notify the local law enforcement agency.

Cleanup and Removal

The responsibility for cleanup and removal of illicit or illegal dumping or discharges will vary by location. Contact the local stormwater management agency for further information.

Costs

Costs to look for and report illicit connections and illegal discharges and dumping are low. The best way to avoid costs associated with illicit connections and illegal discharges and dumping is to keep the project perimeters secure to prevent access to the site, to observe the site for vehicles that should not be there, and to document any waste or hazardous materials that exist onsite before taking possession of the site.

Inspection and Maintenance

- Inspect and verify that activity-based BMPs are in place prior to the commencement of associated activities. While activities associated with the BMP are under way, inspect BMPs in accordance with General Permit requirements for the associated project type and risk level. It is recommended that at a minimum, BMPs be inspected weekly, prior to forecasted rain events, daily during extended rain events, and after the conclusion of rain events.
- Inspect the site regularly to check for any illegal dumping or discharge.
- Prohibit employees and subcontractors from disposing of non-job related debris or materials at the construction site.
- Notify the owner of any illicit connections and illegal dumping or discharge incidents at the time of discovery.

References

Blueprint for a Clean Bay: Best Management Practices to Prevent Stormwater Pollution from Construction Related Activities; Santa Clara Valley Nonpoint Source Pollution Control Program, 1995.

Stormwater Quality Handbooks - Construction Site Best Management Practices (BMPs) Manual, State of California Department of Transportation (Caltrans), November 2000.

Stormwater Management for Construction Activities, Developing Pollution Prevention Plans and Best Management Practices, EPA 832-R-92005; USEPA, April 1992.

Potable Water/Irrigation NS-7

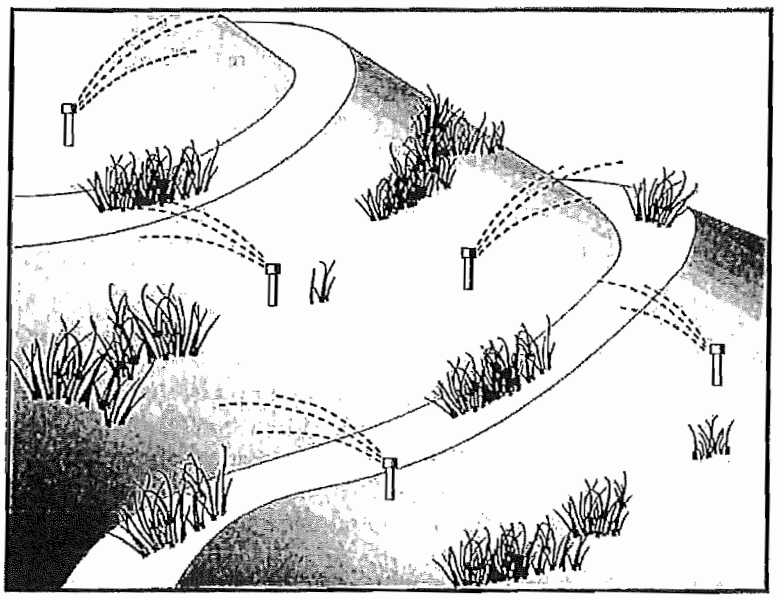

Categories		
EC	Erosion Control	
SE	Sediment Control	
TC	Tracking Control	
WE	Wind Erosion Control	
NS	Non-Stormwater Management Control	☑
WM	Waste Management and Materials Pollution Control	

Legend:

☑ **Primary Objective**

☒ **Secondary Objective**

Targeted Constituents	
Sediment	☑
Nutrients	☑
Trash	
Metals	☑
Bacteria	
Oil and Grease	
Organics	☑

Potential Alternatives

None

Description and Purpose

Potable Water/Irrigation consists of practices and procedures to manage the discharge of potential pollutants generated during discharges from irrigation water lines, landscape irrigation, lawn or garden watering, planned and unplanned discharges from potable water sources, water line flushing, and hydrant flushing.

Suitable Applications

Implement this BMP whenever potable water or irrigation water discharges occur at or enter a construction site.

Limitations

None identified.

Implementation

- Direct water from offsite sources around or through a construction site, where feasible, in a way that minimizes contact with the construction site.
- Discharges from water line flushing should be reused for landscaping purposes where feasible.
- Shut off the water source to broken lines, sprinklers, or valves as soon as possible to prevent excess water flow.
- Protect downstream stormwater drainage systems and watercourses from water pumped or bailed from trenches excavated to repair water lines.
- Inspect irrigated areas within the construction limits for

CASQA
CALIFORNIA STORMWATER QUALITY ASSOCIATION

excess watering. Adjust watering times and schedules to ensure that the appropriate amount of water is being used and to minimize runoff. Consider factors such as soil structure, grade, time of year, and type of plant material in determining the proper amounts of water for a specific area.

Costs

Cost to manage potable water and irrigation are low and generally considered to be a normal part of related activities.

Inspection and Maintenance

- Inspect and verify that activity-based BMPs are in place prior to the commencement of associated activities. While activities associated with the BMP are under way, inspect BMPs in accordance with General Permit requirements for the associated project type and risk level. It is recommended that at a minimum, BMPs be inspected weekly, prior to forecasted rain events, daily during extended rain events, and after the conclusion of rain events..
- Inspect BMPs subject to non-stormwater discharges daily while non-stormwater discharges occur.
- Repair broken water lines as soon as possible.
- Inspect irrigated areas regularly for signs of erosion and/or discharge.

References

Blueprint for a Clean Bay: Best Management Practices to Prevent Stormwater Pollution from Construction Related Activities; Santa Clara Valley Nonpoint Source Pollution Control Program, 1995.

Stormwater Quality Handbooks - Construction Site Best Management Practices (BMPs) Manual, State of California Department of Transportation (Caltrans), November 2000.

Stormwater Management for Construction Activities, Developing Pollution Prevention Plans and Best Management Practices, EPA 832-R-92005; USEPA, April 1992.

Vehicle and Equipment Cleaning NS-8

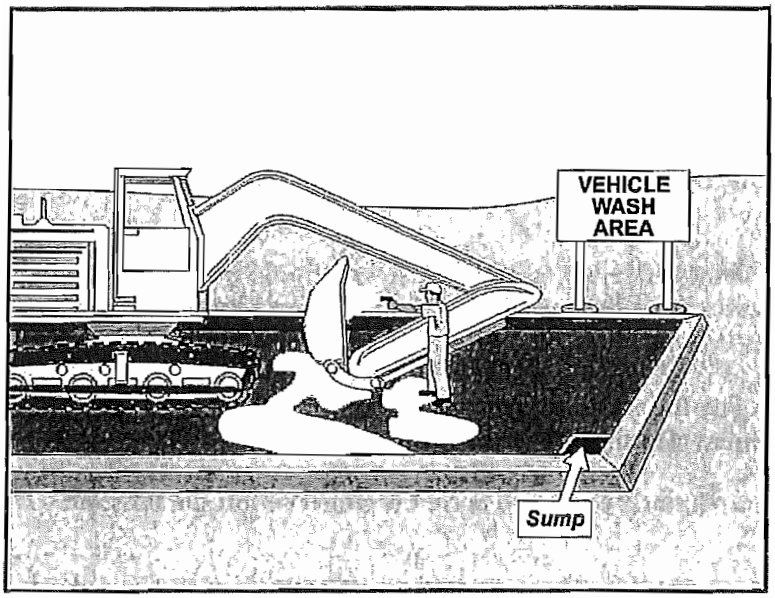

Categories		
EC	Erosion Control	
SE	Sediment Control	
TC	Tracking Control	
WE	Wind Erosion Control	
NS	Non-Stormwater Management Control	☑
WM	Waste Management and Materials Pollution Control	

Legend:

☑ **Primary Objective**

☒ **Secondary Objective**

Targeted Constituents	
Sediment	☑
Nutrients	☑
Trash	
Metals	
Bacteria	
Oil and Grease	☑
Organics	☑

Potential Alternatives

None

Description and Purpose

Vehicle and equipment cleaning procedures and practices eliminate or reduce the discharge of pollutants to stormwater from vehicle and equipment cleaning operations. Procedures and practices include but are not limited to: using offsite facilities; washing in designated, contained areas only; eliminating discharges to the storm drain by infiltrating the wash water; and training employees and subcontractors in proper cleaning procedures.

Suitable Applications

These procedures are suitable on all construction sites where vehicle and equipment cleaning is performed.

Limitations

Even phosphate-free, biodegradable soaps have been shown to be toxic to fish before the soap degrades. Sending vehicles/equipment offsite should be done in conjunction with TC-1, Stabilized Construction Entrance/Exit.

Implementation

Other options to washing equipment onsite include contracting with either an offsite or mobile commercial washing business. These businesses may be better equipped to handle and dispose of the wash waters properly. Performing this work offsite can also be economical by eliminating the need for a separate washing operation onsite.

If washing operations are to take place onsite, then:

CASQA
CALIFORNIA STORMWATER QUALITY ASSOCIATION

- Use phosphate-free, biodegradable soaps.
- Educate employees and subcontractors on pollution prevention measures.
- Do not permit steam cleaning onsite. Steam cleaning can generate significant pollutant concentrates.
- Cleaning of vehicles and equipment with soap, solvents or steam should not occur on the project site unless resulting wastes are fully contained and disposed of. Resulting wastes should not be discharged or buried, and must be captured and recycled or disposed according to the requirements of WM-10, Liquid Waste Management or WM-6, Hazardous Waste Management, depending on the waste characteristics. Minimize use of solvents. Use of diesel for vehicle and equipment cleaning is prohibited.
- All vehicles and equipment that regularly enter and leave the construction site must be cleaned offsite.
- When vehicle and equipment washing and cleaning must occur onsite, and the operation cannot be located within a structure or building equipped with appropriate disposal facilities, the outside cleaning area should have the following characteristics:
  - Located away from storm drain inlets, drainage facilities, or watercourses
  - Paved with concrete or asphalt and bermed to contain wash waters and to prevent runon and runoff
  - Configured with a sump to allow collection and disposal of wash water
  - No discharge of wash waters to storm drains or watercourses
  - Used only when necessary
- When cleaning vehicles and equipment with water:
  - Use as little water as possible. High-pressure sprayers may use less water than a hose and should be considered
  - Use positive shutoff valve to minimize water usage
  - Facility wash racks should discharge to a sanitary sewer, recycle system or other approved discharge system and must not discharge to the storm drainage system, watercourses, or to groundwater

Costs

Cleaning vehicles and equipment at an offsite facility may reduce overall costs for vehicle and equipment cleaning by eliminating the need to provide similar services onsite. When onsite cleaning is needed, the cost to establish appropriate facilities is relatively low on larger, long-duration projects, and moderate to high on small, short-duration projects.

Inspection and Maintenance

- Inspect and verify that activity-based BMPs are in place prior to the commencement of associated activities. While activities associated with the BMP are under way, inspect BMPs in accordance with General Permit requirements for the associated project type and risk level. It is recommended that at a minimum, BMPs be inspected weekly, prior to forecasted rain events, daily during extended rain events, and after the conclusion of rain events.
- Inspect BMPs subject to non-stormwater discharges daily while non-stormwater discharges occur.
- Inspection and maintenance is minimal, although some berm repair may be necessary.
- Monitor employees and subcontractors throughout the duration of the construction project to ensure appropriate practices are being implemented.
- Inspect sump regularly and remove liquids and sediment as needed.
- Prohibit employees and subcontractors from washing personal vehicles and equipment on the construction site.

References

Stormwater Quality Handbooks - Construction Site Best Management Practices (BMPs) Manual, State of California Department of Transportation (Caltrans), November 2000.

Swisher, R.D. Surfactant Biodegradation, Marcel Decker Corporation, 1987.

Vehicle and Equipment Fueling NS-9

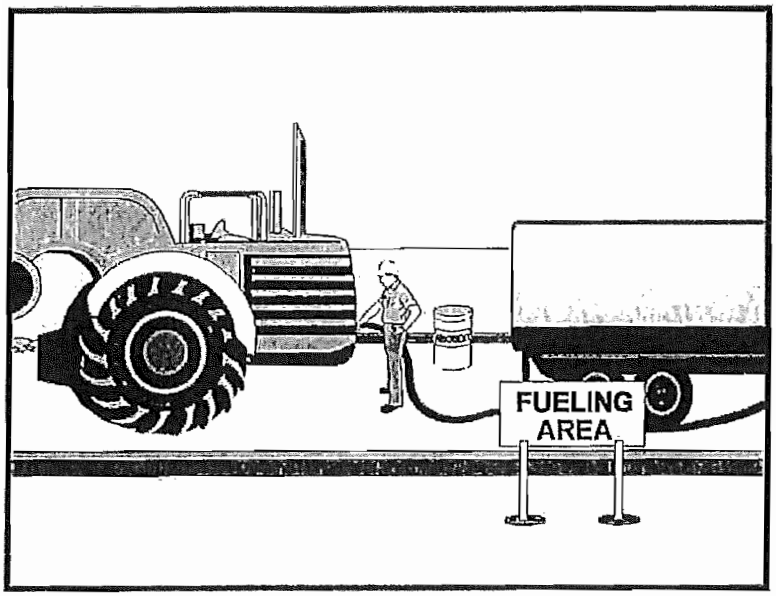

Categories		
EC	Erosion Control	
SE	Sediment Control	
TC	Tracking Control	
WE	Wind Erosion Control	
NS	Non-Stormwater Management Control	☑
WM	Waste Management and Materials Pollution Control	

Legend:

☑ **Primary Objective**

☒ **Secondary Objective**

Targeted Constituents	
Sediment	
Nutrients	
Trash	
Metals	
Bacteria	
Oil and Grease	☑
Organics	

Potential Alternatives

None

Description and Purpose

Vehicle equipment fueling procedures and practices are designed to prevent fuel spills and leaks, and reduce or eliminate contamination of stormwater. This can be accomplished by using offsite facilities, fueling in designated areas only, enclosing or covering stored fuel, implementing spill controls, and training employees and subcontractors in proper fueling procedures.

Suitable Applications

These procedures are suitable on all construction sites where vehicle and equipment fueling takes place.

Limitations

Onsite vehicle and equipment fueling should only be used where it is impractical to send vehicles and equipment offsite for fueling. Sending vehicles and equipment offsite should be done in conjunction with TC-1, Stabilized Construction Entrance/ Exit.

Implementation

- Use offsite fueling stations as much as possible. These businesses are better equipped to handle fuel and spills properly. Performing this work offsite can also be economical by eliminating the need for a separate fueling area at a site.
- Discourage "topping-off" of fuel tanks.
- Absorbent spill cleanup materials and spill kits should be available in fueling areas and on fueling trucks, and should

CASQA
CALIFORNIA STORMWATER QUALITY ASSOCIATION

be disposed of properly after use.

- Drip pans or absorbent pads should be used during vehicle and equipment fueling, unless the fueling is performed over an impermeable surface in a dedicated fueling area.
- Use absorbent materials on small spills. Do not hose down or bury the spill. Remove the adsorbent materials promptly and dispose of properly.
- Avoid mobile fueling of mobile construction equipment around the site; rather, transport the equipment to designated fueling areas. With the exception of tracked equipment such as bulldozers and large excavators, most vehicles should be able to travel to a designated area with little lost time.
- Train employees and subcontractors in proper fueling and cleanup procedures.
- When fueling must take place onsite, designate an area away from drainage courses to be used. Fueling areas should be identified in the SWPPP.
- Dedicated fueling areas should be protected from stormwater runon and runoff, and should be located at least 50 ft away from downstream drainage facilities and watercourses. Fueling must be performed on level-grade areas.
- Protect fueling areas with berms and dikes to prevent runon, runoff, and to contain spills.
- Nozzles used in vehicle and equipment fueling should be equipped with an automatic shutoff to control drips. Fueling operations should not be left unattended.
- Use vapor recovery nozzles to help control drips as well as air pollution where required by Air Quality Management Districts (AQMD).
- Federal, state, and local requirements should be observed for any stationary above ground storage tanks.

Costs

- All of the above measures are low cost except for the capital costs of above ground tanks that meet all local environmental, zoning, and fire codes.

Inspection and Maintenance

- Inspect BMPs in accordance with General Permit requirements for the associated project type and risk level. It is recommended that at a minimum, BMPs be inspected weekly, prior to forecasted rain events, daily during extended rain events, and after the conclusion of rain events.
- Vehicles and equipment should be inspected each day of use for leaks. Leaks should be repaired immediately or problem vehicles or equipment should be removed from the project site.
- Keep ample supplies of spill cleanup materials onsite.

- Immediately clean up spills and properly dispose of contaminated soil and cleanup materials.

References

Blueprint for a Clean Bay: Best Management Practices to Prevent Stormwater Pollution from Construction Related Activities; Santa Clara Valley Nonpoint Source Pollution Control Program, 1995.

Coastal Nonpoint Pollution Control Program: Program Development and Approval Guidance, Working Group Working Paper; USEPA, April 1992.

Stormwater Quality Handbooks - Construction Site Best Management Practices (BMPs) Manual, State of California Department of Transportation (Caltrans), November 2000.

Stormwater Management for Construction Activities, Developing Pollution Prevention Plans and Best Management Practices, EPA 832-R-92005; USEPA, April 1992.

Vehicle & Equipment Maintenance NS-10

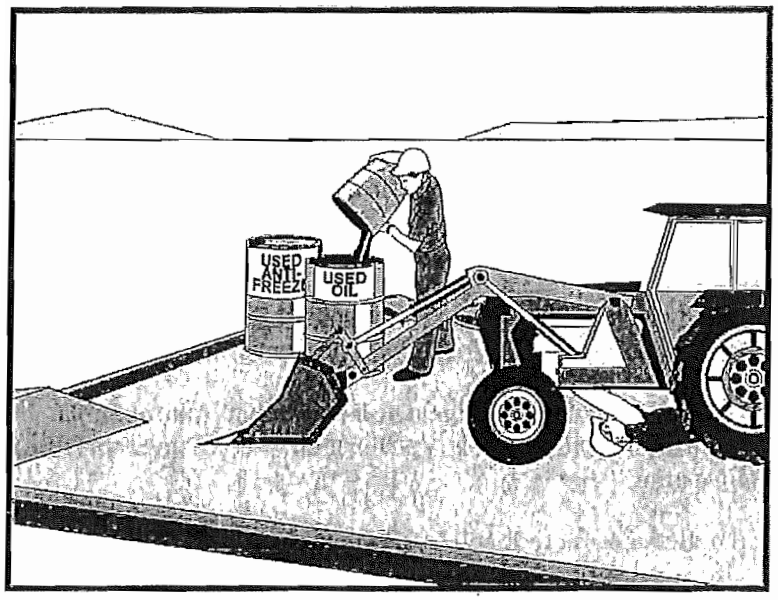

Categories		
EC	Erosion Control	
SE	Sediment Control	
TC	Tracking Control	
WE	Wind Erosion Control	
NS	Non-Stormwater Management Control	☑
WM	Waste Management and Materials Pollution Control	

Legend:

☑ **Primary Objective**

☒ **Secondary Objective**

Targeted Constituents	
Sediment	
Nutrients	☑
Trash	☑
Metals	
Bacteria	
Oil and Grease	☑
Organics	☑

Potential Alternatives

None

Description and Purpose

Prevent or reduce the contamination of stormwater resulting from vehicle and equipment maintenance by running a "dry and clean site". The best option would be to perform maintenance activities at an offsite facility. If this option is not available then work should be performed in designated areas only, while providing cover for materials stored outside, checking for leaks and spills, and containing and cleaning up spills immediately. Employees and subcontractors must be trained in proper procedures.

Suitable Applications

These procedures are suitable on all construction projects where an onsite yard area is necessary for storage and maintenance of heavy equipment and vehicles.

Limitations

Onsite vehicle and equipment maintenance should only be used where it is impractical to send vehicles and equipment offsite for maintenance and repair. Sending vehicles/equipment offsite should be done in conjunction with TC-1, Stabilized Construction Entrance/Exit.

Outdoor vehicle or equipment maintenance is a potentially significant source of stormwater pollution. Activities that can contaminate stormwater include engine repair and service, changing or replacement of fluids, and outdoor equipment storage and parking (engine fluid leaks). For further information on vehicle or equipment servicing, see NS-8, Vehicle and Equipment Cleaning, and NS-9, Vehicle and

CASQA
CALIFORNIA STORMWATER QUALITY ASSOCIATION

Equipment Fueling.

Implementation

- Use offsite repair shops as much as possible. These businesses are better equipped to handle vehicle fluids and spills properly. Performing this work offsite can also be economical by eliminating the need for a separate maintenance area.
- If maintenance must occur onsite, use designated areas, located away from drainage courses. Dedicated maintenance areas should be protected from stormwater runon and runoff, and should be located at least 50 ft from downstream drainage facilities and watercourses.
- Drip pans or absorbent pads should be used during vehicle and equipment maintenance work that involves fluids, unless the maintenance work is performed over an impermeable surface in a dedicated maintenance area.
- Place a stockpile of spill cleanup materials where it will be readily accessible.
- All fueling trucks and fueling areas are required to have spill kits and/or use other spill protection devices.
- Use adsorbent materials on small spills. Remove the absorbent materials promptly and dispose of properly.
- Inspect onsite vehicles and equipment daily at startup for leaks, and repair immediately.
- Keep vehicles and equipment clean; do not allow excessive build-up of oil and grease.
- Segregate and recycle wastes, such as greases, used oil or oil filters, antifreeze, cleaning solutions, automotive batteries, hydraulic and transmission fluids. Provide secondary containment and covers for these materials if stored onsite.
- Train employees and subcontractors in proper maintenance and spill cleanup procedures.
- Drip pans or plastic sheeting should be placed under all vehicles and equipment placed on docks, barges, or other structures over water bodies when the vehicle or equipment is planned to be idle for more than 1 hour.
- For long-term projects, consider using portable tents or covers over maintenance areas if maintenance cannot be performed offsite.
- Consider use of new, alternative greases and lubricants, such as adhesive greases, for chassis lubrication and fifth-wheel lubrication.
- Properly dispose of used oils, fluids, lubricants, and spill cleanup materials.
- Do not place used oil in a dumpster or pour into a storm drain or watercourse.
- Properly dispose of or recycle used batteries.
- Do not bury used tires.

- Repair leaks of fluids and oil immediately.

Listed below is further information if you must perform vehicle or equipment maintenance onsite.

Safer Alternative Products

- Consider products that are less toxic or hazardous than regular products. These products are often sold under an "environmentally friendly" label.
- Consider use of grease substitutes for lubrication of truck fifth-wheels. Follow manufacturers label for details on specific uses.
- Consider use of plastic friction plates on truck fifth-wheels in lieu of grease. Follow manufacturers label for details on specific uses.

Waste Reduction

Parts are often cleaned using solvents such as trichloroethylene, trichloroethane, or methylene chloride. Many of these cleaners are listed in California Toxic Rule as priority pollutants. These materials are harmful and must not contaminate stormwater. They must be disposed of as a hazardous waste. Reducing the number of solvents makes recycling easier and reduces hazardous waste management costs. Often, one solvent can perform a job as well as two different solvents. Also, if possible, eliminate or reduce the amount of hazardous materials and waste by substituting non-hazardous or less hazardous materials. For example, replace chlorinated organic solvents with non-chlorinated solvents. Non-chlorinated solvents like kerosene or mineral spirits are less toxic and less expensive to dispose of properly. Check the list of active ingredients to see whether it contains chlorinated solvents. The "chlor" term indicates that the solvent is chlorinated. Also, try substituting a wire brush for solvents to clean parts.

Recycling and Disposal

Separating wastes allows for easier recycling and may reduce disposal costs. Keep hazardous wastes separate, do not mix used oil solvents, and keep chlorinated solvents (like,-trichloroethane) separate from non-chlorinated solvents (like kerosene and mineral spirits). Promptly transfer used fluids to the proper waste or recycling drums. Don't leave full drip pans or other open containers lying around. Provide cover and secondary containment until these materials can be removed from the site.

Oil filters can be recycled. Ask your oil supplier or recycler about recycling oil filters.

Do not dispose of extra paints and coatings by dumping liquid onto the ground or throwing it into dumpsters. Allow coatings to dry or harden before disposal into covered dumpsters.

Store cracked batteries in a non-leaking secondary container. Do this with all cracked batteries, even if you think all the acid has drained out. If you drop a battery, treat it as if it is cracked. Put it into the containment area until you are sure it is not leaking.

Costs

All of the above are low cost measures. Higher costs are incurred to setup and maintain onsite maintenance areas.

Inspection and Maintenance

- Inspect and verify that activity-based BMPs are in place prior to the commencement of associated activities. While activities associated with the BMP are under way, inspect BMPs in accordance with General Permit requirements for the associated project type and risk level. It is recommended that at a minimum, BMPs be inspected weekly, prior to forecasted rain events, daily during extended rain events, and after the conclusion of rain events.
- Inspect BMPs subject to non-stormwater discharges daily while non-stormwater discharges occur.
- Keep ample supplies of spill cleanup materials onsite.
- Maintain waste fluid containers in leak proof condition.
- Vehicles and equipment should be inspected on each day of use. Leaks should be repaired immediately or the problem vehicle(s) or equipment should be removed from the project site.
- Inspect equipment for damaged hoses and leaky gaskets routinely. Repair or replace as needed.

References

Blueprint for a Clean Bay: Best Management Practices to Prevent Stormwater Pollution from Construction Related Activities; Santa Clara Valley Nonpoint Source Pollution Control Program, 1995.

Coastal Nonpoint Pollution Control Program; Program Development and Approval Guidance, Working Group, Working Paper; USEPA, April 1992.

Stormwater Quality Handbooks - Construction Site Best Management Practices (BMPs) Manual, State of California Department of Transportation (Caltrans), November 2000.

Concrete Curing NS-12

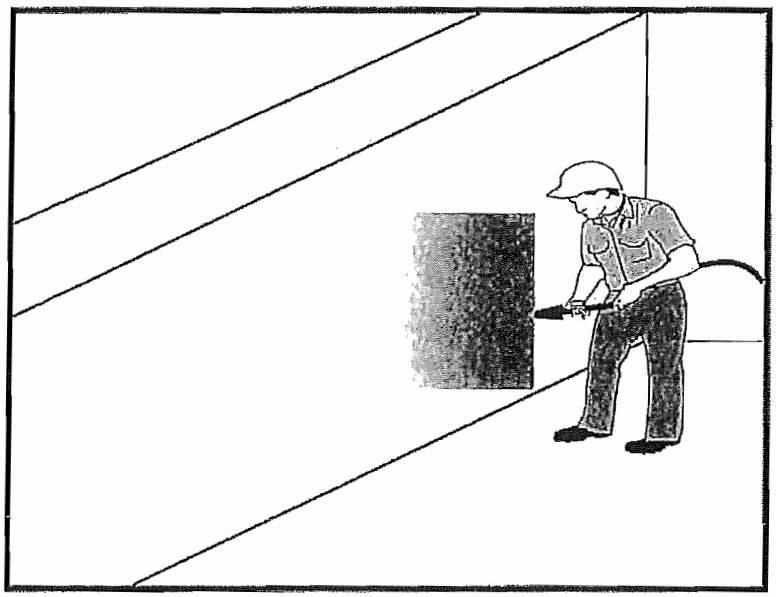

Categories		
EC	Erosion Control	
SE	Sediment Control	
TC	Tracking Control	
WE	Wind Erosion Control	
NS	Non-Stormwater Management Control	☑
WM	Waste Management and Materials Pollution Control	☑

Legend:

☑ **Primary Category**

☒ **Secondary Category**

Targeted Constituents	
Sediment	☑
Nutrients	
Trash	
Metals	☑
Bacteria	
Oil and Grease	☑
Organics	

Potential Alternatives

None

Description and Purpose

Concrete curing is used in the construction of structures such as bridges, retaining walls, pump houses, large slabs, and structured foundations. Concrete curing includes the use of both chemical and water methods.

Concrete and its associated curing materials have basic chemical properties that can raise the pH of water to levels outside of the permitted range. Discharges of stormwater and non-stormwater exposed to concrete during curing may have a high pH and may contain chemicals, metals, and fines. The General Permit incorporates Numeric Effluent Limits (NEL) and Numeric Action Levels (NAL) for pH (see Section 2 of this handbook to determine your project's risk level and if you are subject to these requirements).

Proper procedures and care should be taken when managing concrete curing materials to prevent them from coming into contact with stormwater flows, which could result in a high pH discharge.

Suitable Applications

Suitable applications include all projects where Portland Cement Concrete (PCC) and concrete curing chemicals are placed where they can be exposed to rainfall, runoff from other areas, or where runoff from the PCC will leave the site.

CASQA
CALIFORNIA STORMWATER QUALITY ASSOCIATION

Limitations

- Runoff contact with concrete waste can raise pH levels in the water to environmentally harmful levels and trigger permit violations.

Implementation

Chemical Curing

- Avoid over spray of curing compounds.
- Minimize the drift by applying the curing compound close to the concrete surface. Apply an amount of compound that covers the surface, but does not allow any runoff of the compound.
- Use proper storage and handling techniques for concrete curing compounds. Refer to WM-1, Material Delivery and Storage.
- Protect drain inlets prior to the application of curing compounds.
- Refer to WM-4, Spill Prevention and Control.

Water Curing for Bridge Decks, Retaining Walls, and other Structures

- Direct cure water away from inlets and watercourses to collection areas for evaporation or other means of removal in accordance with all applicable permits. See WM-8 Concrete Waste Management.
- Collect cure water at the top of slopes and transport to a concrete waste management area in a non-erosive manner. See EC-9 Earth Dikes and Drainage Swales, EC-10, Velocity Dissipation Devices, and EC-11, Slope Drains.
- Utilize wet blankets or a similar method that maintains moisture while minimizing the use and possible discharge of water.

Education

- Educate employees, subcontractors, and suppliers on proper concrete curing techniques to prevent contact with discharge as described herein.
- Arrange for the QSP or the appropriately trained contractor's superintendent or representative to oversee and enforce concrete curing procedures.

Costs

All of the above measures are generally low cost.

Inspection and Maintenance

- Inspect and verify that activity-based BMPs are in place prior to the commencement of associated activities.
- BMPs must be inspected in accordance with General Permit requirements for the associated project type and risk level. It is recommended that at a minimum, BMPs be inspected weekly, prior to forecasted rain events, daily during extended rain events, and after the conclusion of rain events.

- Inspect BMPs subject to non-stormwater discharges daily while non-stormwater discharges occur.
- Sample non-stormwater discharges and stormwater runoff that contacts uncured and partially cured concrete as required by the General Permit.
- Ensure that employees and subcontractors implement appropriate measures for storage, handling, and use of curing compounds.
- Inspect cure containers and spraying equipment for leaks.

References

Blue Print for a Clean Bay-Construction-Related Industries: Best Management Practices for Stormwater Pollution Prevention; Santa Clara Valley Non Point Source Pollution Control Program, 1992.

Stormwater Quality Handbooks - Construction Site Best Management Practices (BMPs) Manual, State of California Department of Transportation (Caltrans), March 2003.

Stormwater Management for Construction Activities, Developing Pollution Prevention Plans and Best Management Practices, EPA 832-R-92005; USEPA, April 1992.

Erosion and Sediment Control Manual, Oregon Department of Environmental Quality, February 2005.

Concrete Finishing NS-13

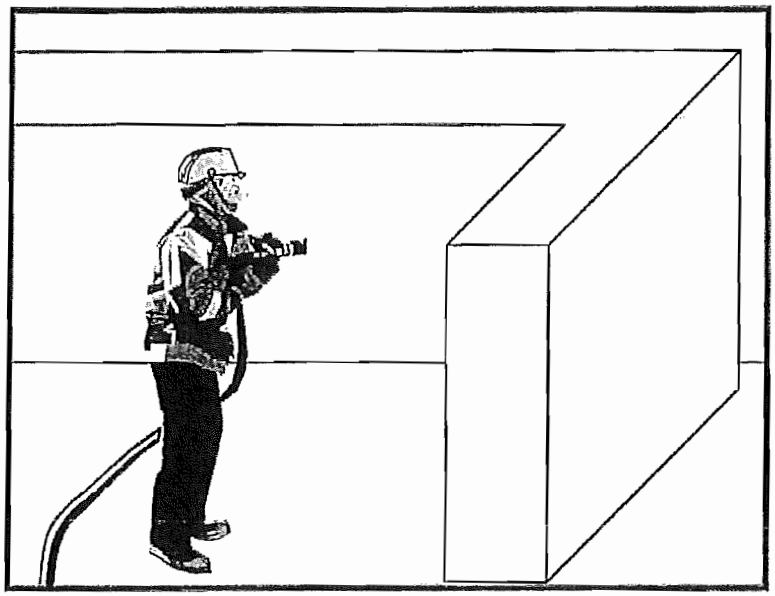

Categories

EC	Erosion Control	
SE	Sediment Control	
TC	Tracking Control	
WE	Wind Erosion Control	
NS	Non-Stormwater Management Control	☑
WM	Waste Management and Materials Pollution Control	☑

Legend:

☑ **Primary Category**

☒ **Secondary Category**

Targeted Constituents

Sediment	☑
Nutrients	
Trash	
Metals	☑
Bacteria	
Oil and Grease	
Organics	☑

Potential Alternatives

None

Description and Purpose

Concrete finishing methods are used for bridge deck rehabilitation, paint removal, curing compound removal, and final surface finish appearances. Methods include sand blasting, shot blasting, grinding, or high pressure water blasting. Stormwater and non-stormwater exposed to concrete finishing by-products may have a high pH and may contain chemicals, metals, and fines. Proper procedures and implementation of appropriate BMPs can minimize the impact that concrete-finishing methods may have on stormwater and non-stormwater discharges.

The General Permit incorporates Numeric Effluent Limits (NEL) and Numeric Action Levels (NAL) for pH (see Section 2 of this handbook to determine your project's risk level and if you are subject to these requirements).

Concrete and its associated curing materials have basic chemical properties that can raise pH levels outside of the permitted range. Additional care should be taken when managing these materials to prevent them from coming into contact with stormwater flows, which could lead to exceedances of the General Permit requirements.

Suitable Applications

These procedures apply to all construction locations where concrete finishing operations are performed.

CASQA
CALIFORNIA STORMWATER QUALITY ASSOCIATION

Limitations

- Runoff contact with concrete waste can raise pH levels in the water to environmentally harmful levels and trigger permit violations.

Implementation

- Collect and properly dispose of water from high-pressure water blasting operations.
- Collect contaminated water from blasting operations at the top of slopes. Transport or dispose of contaminated water while using BMPs such as those for erosion control. Refer to EC-9, Earth Dikes and Drainage Swales, EC-10, Velocity Dissipation Devices, and EC-11, Slope Drains.
- Direct water from blasting operations away from inlets and watercourses to collection areas for infiltration or other means of removal (dewatering). Refer to NS-2 Dewatering Operations.
- Protect inlets during sandblasting operations. Refer to SE-10, Storm Drain Inlet Protection.
- Refer to WM-8, Concrete Waste Management for disposal of concrete debris.
- Minimize the drift of dust and blast material as much as possible by keeping the blasting nozzle close to the surface.
- When blast residue contains a potentially hazardous waste, refer to WM-6, Hazardous Waste Management.

Education

- Educate employees, subcontractors, and suppliers on proper concrete finishing techniques to prevent contact with discharge as described herein.
- Arrange for the QSP or the appropriately trained contractor's superintendent or representative to oversee and enforce concrete finishing procedures.

Costs

These measures are generally of low cost.

Inspection and Maintenance

- Inspect and verify that activity-based BMPs are in place prior to the commencement of associated activities.
- BMPs must be inspected in accordance with General Permit requirements for the associated project type and risk level. It is recommended that at a minimum, BMPs be inspected weekly, prior to forecasted rain events, daily during extended rain events, and after the conclusion of rain events.
- Inspect BMPs subject to non-stormwater discharges daily while non-stormwater discharges occur.
- Sample non-stormwater discharges and stormwater runoff that contacts concrete dust and debris as required by the General Permit.

- Sweep or vacuum up debris from sandblasting at the end of each shift.
- At the end of each work shift, remove and contain liquid and solid waste from containment structures, if any, and from the general work area.
- Inspect containment structures for damage prior to use and prior to onset of forecasted rain.

References

Blueprint for a Clean Bay: Best Management Practices to Prevent Stormwater Pollution from Construction Related Activities; Santa Clara Valley Nonpoint Source Pollution Control Program, 1995.

Stormwater Quality Handbooks - Construction Site Best Management Practices (BMPs) Manual, State of California Department of Transportation (Caltrans), March 2003.

Stormwater Management for Construction Activities, Developing Pollution Prevention Plans and Best Management Practices, EPA 832-R-92005; USEPA, April 1992.

Material Delivery and Storage WM-1

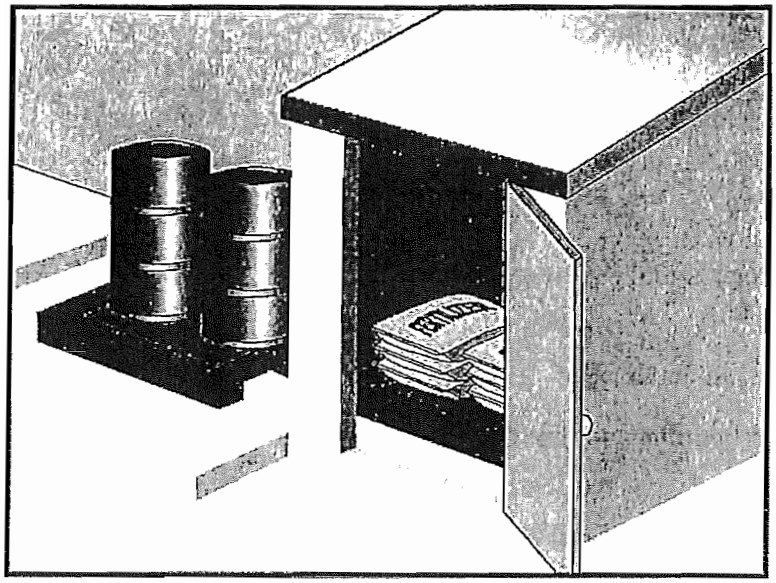

Categories		
EC	Erosion Control	
SE	Sediment Control	
TC	Tracking Control	
WE	Wind Erosion Control	
NS	Non-Stormwater Management Control	
WM	Waste Management and Materials Pollution Control	☑

Legend:

☑ **Primary Category**

☒ **Secondary Category**

Targeted Constituents	
Sediment	☑
Nutrients	☑
Trash	☑
Metals	☑
Bacteria	
Oil and Grease	☑
Organics	☑

Potential Alternatives

None

Description and Purpose

Prevent, reduce, or eliminate the discharge of pollutants from material delivery and storage to the stormwater system or watercourses by minimizing the storage of hazardous materials onsite, storing materials in watertight containers and/or a completely enclosed designated area, installing secondary containment, conducting regular inspections, and training employees and subcontractors.

This best management practice covers only material delivery and storage. For other information on materials, see WM-2, Material Use, or WM-4, Spill Prevention and Control. For information on wastes, see the waste management BMPs in this section.

Suitable Applications

These procedures are suitable for use at all construction sites with delivery and storage of the following materials:

- Soil stabilizers and binders
- Pesticides and herbicides
- Fertilizers
- Detergents
- Plaster
- Petroleum products such as fuel, oil, and grease

CASQA
CALIFORNIA STORMWATER QUALITY ASSOCIATION

- Asphalt and concrete components
- Hazardous chemicals such as acids, lime, glues, adhesives, paints, solvents, and curing compounds
- Concrete compounds
- Other materials that may be detrimental if released to the environment

Limitations

- Space limitation may preclude indoor storage.
- Storage sheds often must meet building and fire code requirements.

Implementation

The following steps should be taken to minimize risk:

- Chemicals must be stored in water tight containers with appropriate secondary containment or in a storage shed.
- When a material storage area is located on bare soil, the area should be lined and bermed.
- Use containment pallets or other practical and available solutions, such as storing materials within newly constructed buildings or garages, to meet material storage requirements.
- Stack erodible landscape material on pallets and cover when not in use.
- Contain all fertilizers and other landscape materials when not in use.
- Temporary storage areas should be located away from vehicular traffic.
- Material Safety Data Sheets (MSDS) should be available on-site for all materials stored that have the potential to effect water quality.
- Construction site areas should be designated for material delivery and storage.
- Material delivery and storage areas should be located away from waterways, if possible.
  - Avoid transport near drainage paths or waterways.
  - Surround with earth berms or other appropriate containment BMP. See EC-9, Earth Dikes and Drainage Swales.
  - Place in an area that will be paved.
- Storage of reactive, ignitable, or flammable liquids must comply with the fire codes of your area. Contact the local Fire Marshal to review site materials, quantities, and proposed storage area to determine specific requirements. See the Flammable and Combustible Liquid Code, NFPA30.
- An up to date inventory of materials delivered and stored onsite should be kept.

- Hazardous materials storage onsite should be minimized.
- Hazardous materials should be handled as infrequently as possible.
- Keep ample spill cleanup supplies appropriate for the materials being stored. Ensure that cleanup supplies are in a conspicuous, labeled area.
- Employees and subcontractors should be trained on the proper material delivery and storage practices.
- Employees trained in emergency spill cleanup procedures must be present when dangerous materials or liquid chemicals are unloaded.
- If significant residual materials remain on the ground after construction is complete, properly remove and dispose of materials and any contaminated soil. See WM-7, Contaminated Soil Management. If the area is to be paved, pave as soon as materials are removed to stabilize the soil.

Material Storage Areas and Practices

- Liquids, petroleum products, and substances listed in 40 CFR Parts 110, 117, or 302 should be stored in approved containers and drums and should not be overfilled. Containers and drums should be placed in temporary containment facilities for storage.
- A temporary containment facility should provide for a spill containment volume able to contain precipitation from a 25 year storm event, plus the greater of 10% of the aggregate volume of all containers or 100% of the capacity of the largest container within its boundary, whichever is greater.
- A temporary containment facility should be impervious to the materials stored therein for a minimum contact time of 72 hours.
- A temporary containment facility should be maintained free of accumulated rainwater and spills. In the event of spills or leaks, accumulated rainwater and spills should be collected and placed into drums. These liquids should be handled as a hazardous waste unless testing determines them to be non-hazardous. All collected liquids or non-hazardous liquids should be sent to an approved disposal site.
- Sufficient separation should be provided between stored containers to allow for spill cleanup and emergency response access.
- Incompatible materials, such as chlorine and ammonia, should not be stored in the same temporary containment facility.
- Materials should be covered prior to, and during rain events.
- Materials should be stored in their original containers and the original product labels should be maintained in place in a legible condition. Damaged or otherwise illegible labels should be replaced immediately.

- Bagged and boxed materials should be stored on pallets and should not be allowed to accumulate on the ground. To provide protection from wind and rain throughout the rainy season, bagged and boxed materials should be covered during non-working days and prior to and during rain events.
- Stockpiles should be protected in accordance with WM-3, Stockpile Management.
- Materials should be stored indoors within existing structures or completely enclosed storage sheds when available.
- Proper storage instructions should be posted at all times in an open and conspicuous location.
- An ample supply of appropriate spill clean up material should be kept near storage areas.
- Also see WM-6, Hazardous Waste Management, for storing of hazardous wastes.

Material Delivery Practices

- Keep an accurate, up-to-date inventory of material delivered and stored onsite.
- Arrange for employees trained in emergency spill cleanup procedures to be present when dangerous materials or liquid chemicals are unloaded.

Spill Cleanup

- Contain and clean up any spill immediately.
- Properly remove and dispose of any hazardous materials or contaminated soil if significant residual materials remain on the ground after construction is complete. See WM-7, Contaminated Soil Management.
- See WM-4, Spill Prevention and Control, for spills of chemicals and/or hazardous materials.
- If spills or leaks of materials occur that are not contained and could discharge to surface waters, non-visible sampling of site discharge may be required. Refer to the General Permit or to your project specific Construction Site Monitoring Plan to determine if and where sampling is required.

Cost

- The largest cost of implementation may be in the construction of a materials storage area that is covered and provides secondary containment.

Inspection and Maintenance

- BMPs must be inspected in accordance with General Permit requirements for the associated project type and risk level. It is recommended that at a minimum, BMPs be inspected weekly, prior to forecasted rain events, daily during extended rain events, and after the conclusion of rain events.
- Keep storage areas clean and well organized, including a current list of all materials onsite.
- Inspect labels on containers for legibility and accuracy.

- Repair or replace perimeter controls, containment structures, covers, and liners as needed to maintain proper function.

References

Blueprint for a Clean Bay: Best Management Practices to Prevent Stormwater Pollution from Construction Related Activities; Santa Clara Valley Nonpoint Source Pollution Control Program, 1995.

Coastal Nonpoint Pollution Control Program: Program Development and Approval Guidance, Working Group Working Paper; USEPA, April 1992.

Stormwater Quality Handbooks - Construction Site Best Management Practices (BMPs) Manual, State of California Department of Transportation (Caltrans), March 2003.

Stormwater Management for Construction Activities; Developing Pollution Prevention Plans and Best Management Practice, EPA 832-R-92005; USEPA, April 1992.

Material Use

WM-2

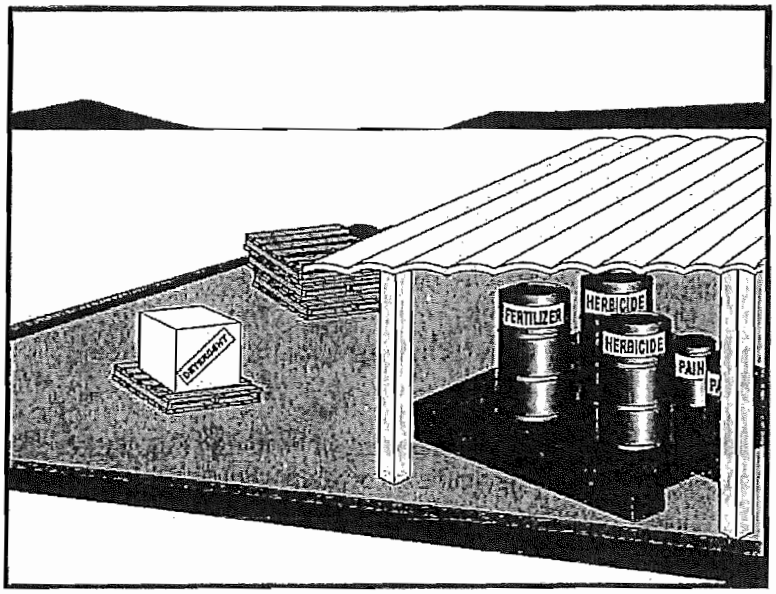

Categories

EC	Erosion Control	
SE	Sediment Control	
TC	Tracking Control	
WE	Wind Erosion Control	
NS	Non-Stormwater Management Control	
WM	Waste Management and Materials Pollution Control	☑

Legend:

☑ **Primary Category**

☒ **Secondary Category**

Targeted Constituents

Sediment	☑
Nutrients	☑
Trash	☑
Metals	☑
Bacteria	
Oil and Grease	☑
Organics	☑

Potential Alternatives

None

Description and Purpose

Prevent or reduce the discharge of pollutants to the storm drain system or watercourses from material use by using alternative products, minimizing hazardous material use onsite, and training employees and subcontractors.

Suitable Applications

This BMP is suitable for use at all construction projects. These procedures apply when the following materials are used or prepared onsite:

- Pesticides and herbicides
- Fertilizers
- Detergents
- Petroleum products such as fuel, oil, and grease
- Asphalt and other concrete components
- Other hazardous chemicals such as acids, lime, glues, adhesives, paints, solvents, and curing compounds
- Other materials that may be detrimental if released to the environment

CASQA
CALIFORNIA STORMWATER QUALITY ASSOCIATION

Limitations

Safer alternative building and construction products may not be available or suitable in every instance.

Implementation

The following steps should be taken to minimize risk:

- Minimize use of hazardous materials onsite.
- Follow manufacturer instructions regarding uses, protective equipment, ventilation, flammability, and mixing of chemicals.
- Train personnel who use pesticides. The California Department of Pesticide Regulation and county agricultural commissioners license pesticide dealers, certify pesticide applicators, and conduct onsite inspections.
- The preferred method of termiticide application is soil injection near the existing or proposed structure foundation/slab; however, if not feasible, soil drench application of termiticides should follow EPA label guidelines and the following recommendations (most of which are applicable to most pesticide applications):
  - Do not treat soil that is water-saturated or frozen.
  - Application shall not commence within 24-hours of a predicted precipitation event with a 40% or greater probability. Weather tracking must be performed on a daily basis prior to termiticide application and during the period of termiticide application.
  - Do not allow treatment chemicals to runoff from the target area. Apply proper quantity to prevent excess runoff. Provide containment for and divert stormwater from application areas using berms or diversion ditches during application.
  - Dry season: Do not apply within 10 feet of storm drains. Do not apply within 25 feet of aquatic habitats (such as, but not limited to, lakes; reservoirs; rivers; permanent streams; marshes or ponds; estuaries; and commercial fish farm ponds).
  - Wet season: Do not apply within 50 feet of storm drains or aquatic habitats (such as, but not limited to, lakes; reservoirs; rivers; permanent streams; marshes or ponds; estuaries; and commercial fish farm ponds) unless a vegetative buffer is present (if so, refer to dry season requirements).
  - Do not make on-grade applications when sustained wind speeds are above 10 mph (at application site) at nozzle end height.
  - Cover treatment site prior to a rain event in order to prevent run-off of the pesticide into non-target areas. The treated area should be limited to a size that can be backfilled and/or covered by the end of the work shift. Backfilling or covering of the treated area shall be done by the end of the same work shift in which the application is made.
  - The applicator must either cover the soil him/herself or provide written notification of the above requirement to the contractor on site and to the person commissioning the

application (if different than the contractor). If notice is provided to the contractor or the person commissioning the application, then they are responsible under the Federal Insecticide Fungicide, and Rodenticide Act (FIFRA) to ensure that: 1) if the concrete slab cannot be poured over the treated soil within 24 hours of application, the treated soil is covered with a waterproof covering (such as polyethylene sheeting), and 2) the treated soil is covered if precipitation is predicted to occur before the concrete slab is scheduled to be poured.

- Do not over-apply fertilizers, herbicides, and pesticides. Prepare only the amount needed. Follow the recommended usage instructions. Over-application is expensive and environmentally harmful. Unless on steep slopes, till fertilizers into the soil rather than hydraulic application. Apply surface dressings in several smaller applications, as opposed to one large application, to allow time for infiltration and to avoid excess material being carried offsite by runoff. Do not apply these chemicals before predicted rainfall.
- Train employees and subcontractors in proper material use.
- Supply Material Safety Data Sheets (MSDS) for all materials.
- Dispose of latex paint and paint cans, used brushes, rags, absorbent materials, and drop cloths, when thoroughly dry and are no longer hazardous, with other construction debris.
- Do not remove the original product label; it contains important safety and disposal information. Use the entire product before disposing of the container.
- Mix paint indoors or in a containment area. Never clean paintbrushes or rinse paint containers into a street, gutter, storm drain, or watercourse. Dispose of any paint thinners, residue, and sludge(s) that cannot be recycled, as hazardous waste.
- For water-based paint, clean brushes to the extent practicable, and rinse to a drain leading to a sanitary sewer where permitted, or contain for proper disposal off site. For oil-based paints, clean brushes to the extent practicable, and filter and reuse thinners and solvents.
- Use recycled and less hazardous products when practical. Recycle residual paints, solvents, non-treated lumber, and other materials.
- Use materials only where and when needed to complete the construction activity. Use safer alternative materials as much as possible. Reduce or eliminate use of hazardous materials onsite when practical.
- Document the location, time, chemicals applied, and applicator's name and qualifications.
- Keep an ample supply of spill clean up material near use areas. Train employees in spill clean up procedures.
- Avoid exposing applied materials to rainfall and runoff unless sufficient time has been allowed for them to dry.
- Discontinue use of erodible landscape material within 2 days prior to a forecasted rain event and materials should be covered and/or bermed.

- Provide containment for material use areas such as masons' areas or paint mixing/preparation areas to prevent materials/pollutants from entering stormwater.

Costs

All of the above are low cost measures.

Inspection and Maintenance

- Inspect and verify that activity-based BMPs are in place prior to the commencement of associated activities.
- BMPs must be inspected in accordance with General Permit requirements for the associated project type and risk level. It is recommended that at a minimum, BMPs be inspected weekly, prior to forecasted rain events, daily during extended rain events, and after the conclusion of rain events.
- Ensure employees and subcontractors throughout the job are using appropriate practices.

References

Blueprint for a Clean Bay: Best Management Practices to Prevent Stormwater Pollution from Construction Related Activities; Santa Clara Valley Nonpoint Source Pollution Control Program, 1995.

Coastal Nonpoint Pollution Control Program: Program Development and Approval Guidance, Working Group Working Paper; USEPA, April 1992.

Comments on Risk Assessments Risk Reduction Options for Cypermethrin: Docket No. OPP–2005–0293; California Stormwater Quality Association (CASQA) letter to USEPA, 2006.Environmental Hazard and General Labeling for Pyrethroid Non-Agricultural Outdoor Products, EPA-HQ-OPP-2008-0331-0021; USEPA, 2008.

Stormwater Quality Handbooks - Construction Site Best Management Practices (BMPs) Manual, State of California Department of Transportation (Caltrans), March 2003.

Stormwater Management for Construction Activities; Developing Pollution Prevention Plans and Best Management Practice, EPA 832-R-92005; USEPA, April 1992.

Stockpile Management WM-3

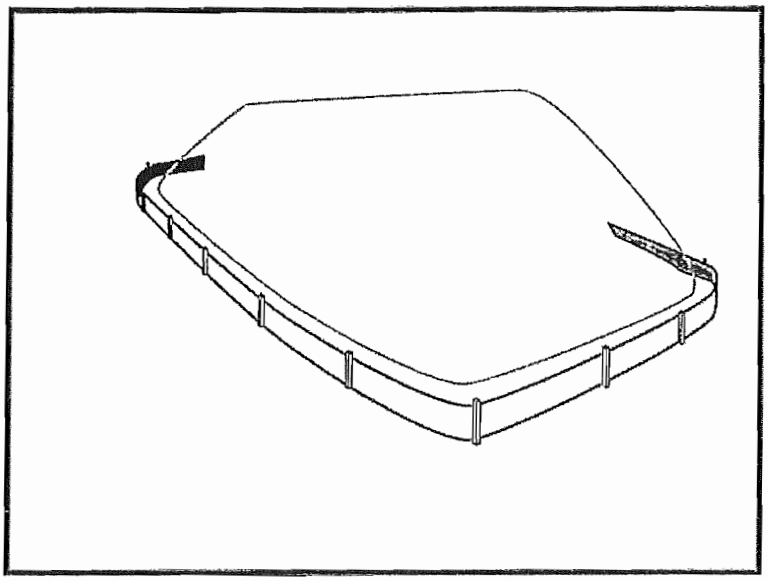

Categories		
EC	Erosion Control	
SE	Sediment Control	☒
TC	Tracking Control	
WE	Wind Erosion Control	
NS	Non-Stormwater Management Control	☒
WM	Waste Management and Materials Pollution Control	☑

Legend:
☑ **Primary Category**
☒ **Secondary Category**

Targeted Constituents	
Sediment	☑
Nutrients	☑
Trash	☑
Metals	☑
Bacteria	
Oil and Grease	☑
Organics	☑

Potential Alternatives

None

Description and Purpose

Stockpile management procedures and practices are designed to reduce or eliminate air and stormwater pollution from stockpiles of soil, soil amendments, sand, paving materials such as portland cement concrete (PCC) rubble, asphalt concrete (AC), asphalt concrete rubble, aggregate base, aggregate sub base or pre-mixed aggregate, asphalt minder (so called "cold mix" asphalt), and pressure treated wood.

Suitable Applications

Implement in all projects that stockpile soil and other loose materials.

Limitations

- Plastic sheeting as a stockpile protection is temporary and hard to manage in windy conditions. Where plastic is used, consider use of plastic tarps with nylon reinforcement which may be more durable than standard sheeting.
- Plastic sheeting can increase runoff volume due to lack of infiltration and potentially cause perimeter control failure.
- Plastic sheeting breaks down faster in sunlight.
- The use of plastic materials should be avoided when feasible and photodegradable plastics should not be used.

Implementation

Protection of stockpiles is a year-round requirement. To properly manage stockpiles:

CASQA
CALIFORNIA STORMWATER QUALITY ASSOCIATION

- On larger sites, a minimum of 50 ft separation from concentrated flows of stormwater, drainage courses, and inlets is recommended.
- All stockpiles are required to be protected immediately if they are not scheduled to be used within 14 days.
- Protect all stockpiles from stormwater run-on using temporary perimeter sediment barriers such as compost berms (SE-13), temporary silt dikes (SE-12), fiber rolls (SE-5), silt fences (SE-1), sandbags (SE-8), gravel bags (SE-6), or biofilter bags (SE-14). Refer to the individual fact sheet for each of these controls for installation information.
- Implement wind erosion control practices as appropriate on all stockpiled material. For specific information, see WE-1, Wind Erosion Control.
- Manage stockpiles of contaminated soil in accordance with WM-7, Contaminated Soil Management.
- Place bagged materials on pallets and under cover.
- Ensure that stockpile coverings are installed securely to protect from wind and rain.
- Some plastic covers withstand weather and sunlight better than others. Select cover materials or methods based on anticipated duration of use.

Protection of Non-Active Stockpiles

Non-active stockpiles of the identified materials should be protected further as follows:

Soil stockpiles

- Cover and project soil stockpiles with soil stabilization measures and a temporary perimeter sediment barrier at all times.
- Consider temporary vegetation for topsoil piles that will be stockpiled for extended periods.

Stockpiles of Portland cement concrete rubble, asphalt concrete, asphalt concrete rubble, aggregate base, or aggregate sub base

- Provide covers and protect these stockpiles with a temporary perimeter sediment barrier at all times.

Stockpiles of "cold mix"

- Cover cold mix stockpiles and place them on plastic sheeting (or comparable material) and surround the stockpiles with a berm all times.

Stockpiles of fly ash, stucco, hydrated lime

- Cover stockpiles of materials that may raise the pH of runoff (i.e., basic materials) with plastic and surround the stockpiles with a berm at all times.

Stockpiles/Storage of wood (Pressure treated with chromated copper arsenate or ammoniacal copper zinc arsenate)

- Cover treated wood with plastic sheeting (or comparable material) and surround with a berm at all times.

Protection of Active Stockpiles

Active stockpiles of the identified materials should be protected as follows:

- All stockpiles should be covered and protected with a temporary linear sediment barrier prior to the onset of precipitation.
- Stockpiles of "cold mix" and treated wood, and basic materials should be placed on and covered with plastic sheeting or comparable material and surrounded by a berm prior to the onset of precipitation.
- The downstream perimeter of an active stockpile should be protected with a linear sediment barrier or berm and runoff should be diverted around or away from the stockpile on the upstream perimeter.

Costs

For cost information associated with stockpile protection refer to the individual erosion or sediment control BMP fact sheet considered for implementation (For example, refer to SE-1 Silt Fence for installation of silt fence around the perimeter of a stockpile.)

Inspection and Maintenance

- Stockpiles must be inspected in accordance with General Permit requirements for the associated project type and risk level. It is recommended that at a minimum, BMPs be inspected weekly, prior to forecasted rain events, daily during extended rain events, and after the conclusion of rain events.
- It may be necessary to inspect stockpiles covered with plastic sheeting more frequently during certain conditions (for example, high winds or extreme heat).
- Repair and/or replace perimeter controls and covers as needed to keep them functioning properly.
- Sediment shall be removed when it reaches one-third of the barrier height.

References

Stormwater Quality Handbooks - Construction Site Best Management Practices (BMPs) Manual, State of California Department of Transportation (Caltrans), March 2003.

Spill Prevention and Control WM-4

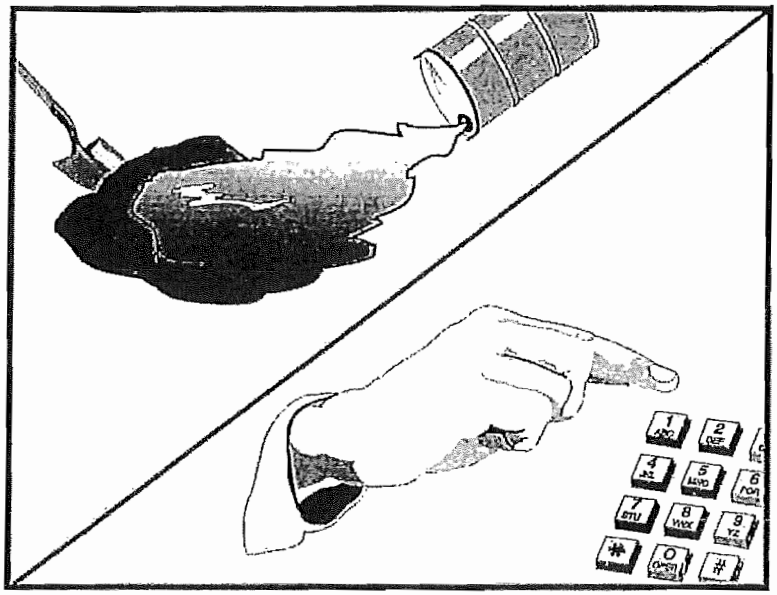

Categories

EC	Erosion Control	
SE	Sediment Control	
TC	Tracking Control	
WE	Wind Erosion Control	
NS	Non-Stormwater Management Control	
WM	Waste Management and Materials Pollution Control	☑

Legend:

☑ **Primary Objective**

☒ **Secondary Objective**

Targeted Constituents

Sediment	☑
Nutrients	☑
Trash	☑
Metals	☑
Bacteria	
Oil and Grease	☑
Organics	☑

Potential Alternatives

None

Description and Purpose

Prevent or reduce the discharge of pollutants to drainage systems or watercourses from leaks and spills by reducing the chance for spills, stopping the source of spills, containing and cleaning up spills, properly disposing of spill materials, and training employees.

This best management practice covers only spill prevention and control. However, WM-1, Materials Delivery and Storage, and WM-2, Material Use, also contain useful information, particularly on spill prevention. For information on wastes, see the waste management BMPs in this section.

Suitable Applications

This BMP is suitable for all construction projects. Spill control procedures are implemented anytime chemicals or hazardous substances are stored on the construction site, including the following materials:

- Soil stabilizers/binders
- Dust palliatives
- Herbicides
- Growth inhibitors
- Fertilizers
- Deicing/anti-icing chemicals

CASQA
CALIFORNIA STORMWATER QUALITY ASSOCIATION

- Fuels
- Lubricants
- Other petroleum distillates

Limitations

- In some cases it may be necessary to use a private spill cleanup company.
- This BMP applies to spills caused by the contractor and subcontractors.
- Procedures and practices presented in this BMP are general. Contractor should identify appropriate practices for the specific materials used or stored onsite

Implementation

The following steps will help reduce the stormwater impacts of leaks and spills:

Education

- Be aware that different materials pollute in different amounts. Make sure that each employee knows what a "significant spill" is for each material they use, and what is the appropriate response for "significant" and "insignificant" spills.
- Educate employees and subcontractors on potential dangers to humans and the environment from spills and leaks.
- Hold regular meetings to discuss and reinforce appropriate disposal procedures (incorporate into regular safety meetings).
- Establish a continuing education program to indoctrinate new employees.
- Have contractor's superintendent or representative oversee and enforce proper spill prevention and control measures.

General Measures

- To the extent that the work can be accomplished safely, spills of oil, petroleum products, substances listed under 40 CFR parts 110,117, and 302, and sanitary and septic wastes should be contained and cleaned up immediately.
- Store hazardous materials and wastes in covered containers and protect from vandalism.
- Place a stockpile of spill cleanup materials where it will be readily accessible.
- Train employees in spill prevention and cleanup.
- Designate responsible individuals to oversee and enforce control measures.
- Spills should be covered and protected from stormwater runon during rainfall to the extent that it doesn't compromise clean up activities.
- Do not bury or wash spills with water.

- Store and dispose of used clean up materials, contaminated materials, and recovered spill material that is no longer suitable for the intended purpose in conformance with the provisions in applicable BMPs.
- Do not allow water used for cleaning and decontamination to enter storm drains or watercourses. Collect and dispose of contaminated water in accordance with WM-10, Liquid Waste Management.
- Contain water overflow or minor water spillage and do not allow it to discharge into drainage facilities or watercourses.
- Place proper storage, cleanup, and spill reporting instructions for hazardous materials stored or used on the project site in an open, conspicuous, and accessible location.
- Keep waste storage areas clean, well organized, and equipped with ample cleanup supplies as appropriate for the materials being stored. Perimeter controls, containment structures, covers, and liners should be repaired or replaced as needed to maintain proper function.

Cleanup

- Clean up leaks and spills immediately.
- Use a rag for small spills on paved surfaces, a damp mop for general cleanup, and absorbent material for larger spills. If the spilled material is hazardous, then the used cleanup materials are also hazardous and must be sent to either a certified laundry (rags) or disposed of as hazardous waste.
- Never hose down or bury dry material spills. Clean up as much of the material as possible and dispose of properly. See the waste management BMPs in this section for specific information.

Minor Spills

- Minor spills typically involve small quantities of oil, gasoline, paint, etc. which can be controlled by the first responder at the discovery of the spill.
- Use absorbent materials on small spills rather than hosing down or burying the spill.
- Absorbent materials should be promptly removed and disposed of properly.
- Follow the practice below for a minor spill:
  - Contain the spread of the spill.
  - Recover spilled materials.
  - Clean the contaminated area and properly dispose of contaminated materials.

Semi-Significant Spills

- Semi-significant spills still can be controlled by the first responder along with the aid of other personnel such as laborers and the foreman, etc. This response may require the cessation of all other activities.

- Spills should be cleaned up immediately:
  - Contain spread of the spill.
  - Notify the project foreman immediately.
  - If the spill occurs on paved or impermeable surfaces, clean up using "dry" methods (absorbent materials, cat litter and/or rags). Contain the spill by encircling with absorbent materials and do not let the spill spread widely.
  - If the spill occurs in dirt areas, immediately contain the spill by constructing an earthen dike. Dig up and properly dispose of contaminated soil.
  - If the spill occurs during rain, cover spill with tarps or other material to prevent contaminating runoff.

Significant/Hazardous Spills

- For significant or hazardous spills that cannot be controlled by personnel in the immediate vicinity, the following steps should be taken:
  - Notify the local emergency response by dialing 911. In addition to 911, the contractor will notify the proper county officials. It is the contractor's responsibility to have all emergency phone numbers at the construction site.
  - Notify the Governor's Office of Emergency Services Warning Center, (916) 845-8911.
  - For spills of federal reportable quantities, in conformance with the requirements in 40 CFR parts 110,119, and 302, the contractor should notify the National Response Center at (800) 424-8802.
  - Notification should first be made by telephone and followed up with a written report.
  - The services of a spills contractor or a Haz-Mat team should be obtained immediately. Construction personnel should not attempt to clean up until the appropriate and qualified staffs have arrived at the job site.
  - Other agencies which may need to be consulted include, but are not limited to, the Fire Department, the Public Works Department, the Coast Guard, the Highway Patrol, the City/County Police Department, Department of Toxic Substances, California Division of Oil and Gas, Cal/OSHA, etc.

Reporting

- Report significant spills to local agencies, such as the Fire Department; they can assist in cleanup.
- Federal regulations require that any significant oil spill into a water body or onto an adjoining shoreline be reported to the National Response Center (NRC) at 800-424-8802 (24 hours).

Use the following measures related to specific activities:

Vehicle and Equipment Maintenance

- If maintenance must occur onsite, use a designated area and a secondary containment, located away from drainage courses, to prevent the runon of stormwater and the runoff of spills.
- Regularly inspect onsite vehicles and equipment for leaks and repair immediately
- Check incoming vehicles and equipment (including delivery trucks, and employee and subcontractor vehicles) for leaking oil and fluids. Do not allow leaking vehicles or equipment onsite.
- Always use secondary containment, such as a drain pan or drop cloth, to catch spills or leaks when removing or changing fluids.
- Place drip pans or absorbent materials under paving equipment when not in use.
- Use absorbent materials on small spills rather than hosing down or burying the spill. Remove the absorbent materials promptly and dispose of properly.
- Promptly transfer used fluids to the proper waste or recycling drums. Don't leave full drip pans or other open containers lying around
- Oil filters disposed of in trashcans or dumpsters can leak oil and pollute stormwater. Place the oil filter in a funnel over a waste oil-recycling drum to drain excess oil before disposal. Oil filters can also be recycled. Ask the oil supplier or recycler about recycling oil filters.
- Store cracked batteries in a non-leaking secondary container. Do this with all cracked batteries even if you think all the acid has drained out. If you drop a battery, treat it as if it is cracked. Put it into the containment area until you are sure it is not leaking.

Vehicle and Equipment Fueling

- If fueling must occur onsite, use designate areas, located away from drainage courses, to prevent the runon of stormwater and the runoff of spills.
- Discourage "topping off" of fuel tanks.
- Always use secondary containment, such as a drain pan, when fueling to catch spills/ leaks.

Costs

Prevention of leaks and spills is inexpensive. Treatment and/ or disposal of contaminated soil or water can be quite expensive.

Inspection and Maintenance

- Inspect and verify that activity–based BMPs are in place prior to the commencement of associated activities. While activities associated with the BMP are under way, inspect BMPs in accordance with General Permit requirements for the associated project type and risk level. It is recommended that at a minimum, BMPs be inspected weekly, prior to forecasted rain events, daily during extended rain events, and after the conclusion of rain events.

- Inspect BMPs subject to non-stormwater discharge daily while non-stormwater discharges occur.
- Keep ample supplies of spill control and cleanup materials onsite, near storage, unloading, and maintenance areas.
- Update your spill prevention and control plan and stock cleanup materials as changes occur in the types of chemicals onsite.

References

Blueprint for a Clean Bay: Best Management Practices to Prevent Stormwater Pollution from Construction Related Activities; Santa Clara Valley Nonpoint Source Pollution Control Program, 1995.

Stormwater Quality Handbooks - Construction Site Best Management Practices (BMPs) Manual, State of California Department of Transportation (Caltrans), November 2000.

Stormwater Management for Construction Activities; Developing Pollution Prevention Plans and Best Management Practice, EPA 832-R-92005; USEPA, April 1992.

Solid Waste Management WM-5

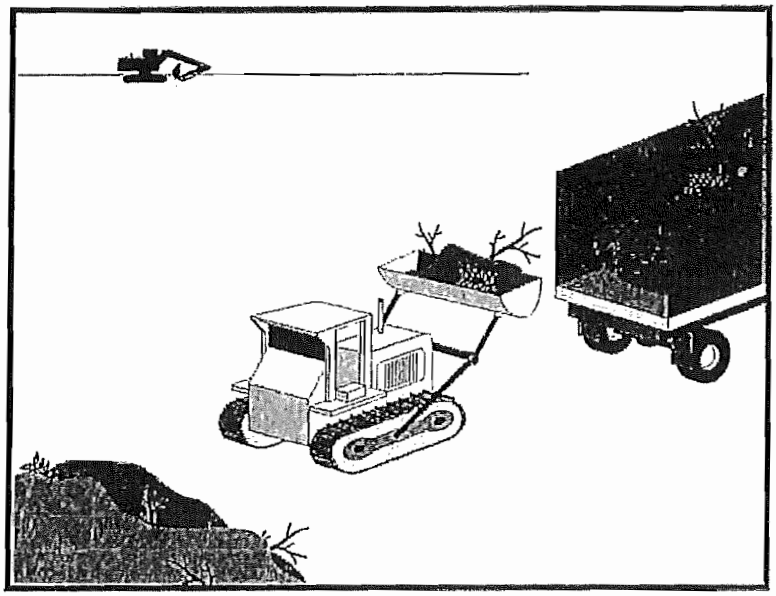

Categories		
EC	Erosion Control	
SE	Sediment Control	
TC	Tracking Control	
WE	Wind Erosion Control	
NS	Non-Stormwater Management Control	
WM	Waste Management and Materials Pollution Control	☑

Legend:

☑ **Primary Objective**

☒ **Secondary Objective**

Targeted Constituents	
Sediment	☑
Nutrients	☑
Trash	☑
Metals	☑
Bacteria	
Oil and Grease	☑
Organics	☑

Potential Alternatives

None

Description and Purpose

Solid waste management procedures and practices are designed to prevent or reduce the discharge of pollutants to stormwater from solid or construction waste by providing designated waste collection areas and containers, arranging for regular disposal, and training employees and subcontractors.

Suitable Applications

This BMP is suitable for construction sites where the following wastes are generated or stored:

- Solid waste generated from trees and shrubs removed during land clearing, demolition of existing structures (rubble), and building construction
- Packaging materials including wood, paper, and plastic
- Scrap or surplus building materials including scrap metals, rubber, plastic, glass pieces, and masonry products
- Domestic wastes including food containers such as beverage cans, coffee cups, paper bags, plastic wrappers, and cigarettes
- Construction wastes including brick, mortar, timber, steel and metal scraps, pipe and electrical cuttings, non-hazardous equipment parts, styrofoam and other materials used to transport and package construction materials
- Highway planting wastes, including vegetative material,

CASQA
CALIFORNIA STORMWATER QUALITY ASSOCIATION

plant containers, and packaging materials

Limitations

Temporary stockpiling of certain construction wastes may not necessitate stringent drainage related controls during the non-rainy season or in desert areas with low rainfall.

Implementation

The following steps will help keep a clean site and reduce stormwater pollution:

- Select designated waste collection areas onsite.
- Inform trash-hauling contractors that you will accept only watertight dumpsters for onsite use. Inspect dumpsters for leaks and repair any dumpster that is not watertight.
- Locate containers in a covered area or in a secondary containment.
- Provide an adequate number of containers with lids or covers that can be placed over the container to keep rain out or to prevent loss of wastes when it is windy.
- Cover waste containers at the end of each work day and when it is raining.
- Plan for additional containers and more frequent pickup during the demolition phase of construction.
- Collect site trash daily, especially during rainy and windy conditions.
- Remove this solid waste promptly since erosion and sediment control devices tend to collect litter.
- Make sure that toxic liquid wastes (used oils, solvents, and paints) and chemicals (acids, pesticides, additives, curing compounds) are not disposed of in dumpsters designated for construction debris.
- Do not hose out dumpsters on the construction site. Leave dumpster cleaning to the trash hauling contractor.
- Arrange for regular waste collection before containers overflow.
- Clean up immediately if a container does spill.
- Make sure that construction waste is collected, removed, and disposed of only at authorized disposal areas.

Education

- Have the contractor's superintendent or representative oversee and enforce proper solid waste management procedures and practices.
- Instruct employees and subcontractors on identification of solid waste and hazardous waste.
- Educate employees and subcontractors on solid waste storage and disposal procedures.

- Hold regular meetings to discuss and reinforce disposal procedures (incorporate into regular safety meetings).
- Require that employees and subcontractors follow solid waste handling and storage procedures.
- Prohibit littering by employees, subcontractors, and visitors.
- Minimize production of solid waste materials wherever possible.

Collection, Storage, and Disposal

- Littering on the project site should be prohibited.
- To prevent clogging of the storm drainage system, litter and debris removal from drainage grates, trash racks, and ditch lines should be a priority.
- Trash receptacles should be provided in the contractor's yard, field trailer areas, and at locations where workers congregate for lunch and break periods.
- Litter from work areas within the construction limits of the project site should be collected and placed in watertight dumpsters at least weekly, regardless of whether the litter was generated by the contractor, the public, or others. Collected litter and debris should not be placed in or next to drain inlets, stormwater drainage systems, or watercourses.
- Dumpsters of sufficient size and number should be provided to contain the solid waste generated by the project.
- Full dumpsters should be removed from the project site and the contents should be disposed of by the trash hauling contractor.
- Construction debris and waste should be removed from the site biweekly or more frequently as needed.
- Construction material visible to the public should be stored or stacked in an orderly manner.
- Stormwater runon should be prevented from contacting stored solid waste through the use of berms, dikes, or other temporary diversion structures or through the use of measures to elevate waste from site surfaces.
- Solid waste storage areas should be located at least 50 ft from drainage facilities and watercourses and should not be located in areas prone to flooding or ponding.
- Except during fair weather, construction and highway planting waste not stored in watertight dumpsters should be securely covered from wind and rain by covering the waste with tarps or plastic.
- Segregate potentially hazardous waste from non-hazardous construction site waste.
- Make sure that toxic liquid wastes (used oils, solvents, and paints) and chemicals (acids, pesticides, additives, curing compounds) are not disposed of in dumpsters designated for construction debris.

- For disposal of hazardous waste, see WM-6, Hazardous Waste Management. Have hazardous waste hauled to an appropriate disposal and/or recycling facility.
- Salvage or recycle useful vegetation debris, packaging and surplus building materials when practical. For example, trees and shrubs from land clearing can be used as a brush barrier, or converted into wood chips, then used as mulch on graded areas. Wood pallets, cardboard boxes, and construction scraps can also be recycled.

Costs

All of the above are low cost measures.

Inspection and Maintenance

- Inspect and verify that activity–based BMPs are in place prior to the commencement of associated activities. While activities associated with the BMP are under way, inspect BMPs in accordance with General Permit requirements for the associated project type and risk level. It is recommended that at a minimum, BMPs be inspected weekly, prior to forecasted rain events, daily during extended rain events, and after the conclusion of rain events.
- Inspect BMPs subject to non-stormwater discharge daily while non-stormwater discharges occur
- Inspect construction waste area regularly.
- Arrange for regular waste collection.

References

Processes, Procedures and Methods to Control Pollution Resulting from All Construction Activity, 430/9-73-007, USEPA, 1973.

Stormwater Quality Handbooks - Construction Site Best Management Practices (BMPs) Manual, State of California Department of Transportation (Caltrans), November 2000.

Stormwater Management for Construction Activities; Developing Pollution Prevention Plans and Best Management Practice, EPA 832-R-92005; USEPA, April 1992.

Hazardous Waste Management WM-6

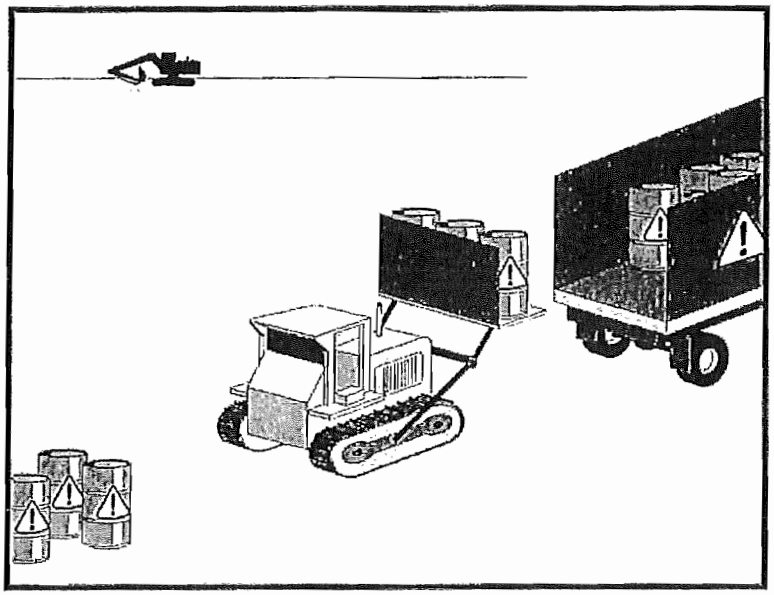

Categories		
EC	Erosion Control	
SE	Sediment Control	
TC	Tracking Control	
WE	Wind Erosion Control	
NS	Non-Stormwater Management Control	
WM	Waste Management and Materials Pollution Control	☑

Legend:

☑ **Primary Objective**

☒ **Secondary Objective**

Targeted Constituents	
Sediment	
Nutrients	☑
Trash	☑
Metals	☑
Bacteria	☑
Oil and Grease	☑
Organics	☑

Potential Alternatives

None

Description and Purpose

Prevent or reduce the discharge of pollutants to stormwater from hazardous waste through proper material use, waste disposal, and training of employees and subcontractors.

Suitable Applications

This best management practice (BMP) applies to all construction projects. Hazardous waste management practices are implemented on construction projects that generate waste from the use of:

- Petroleum Products
- Concrete Curing Compounds
- Palliatives
- Septic Wastes
- Stains
- Wood Preservatives
- Asphalt Products
- Pesticides
- Acids
- Paints
- Solvents
- Roofing Tar
- Any materials deemed a hazardous waste in California, Title 22 Division 4.5, or listed in 40 CFR Parts 110, 117, 261, or 302

CASQA
CALIFORNIA STORMWATER QUALITY ASSOCIATION

In addition, sites with existing structures may contain wastes, which must be disposed of in accordance with federal, state, and local regulations. These wastes include:

- Sandblasting grit mixed with lead-, cadmium-, or chromium-based paints
- Asbestos
- PCBs (particularly in older transformers)

Limitations

- Hazardous waste that cannot be reused or recycled must be disposed of by a licensed hazardous waste hauler.
- Nothing in this BMP relieves the contractor from responsibility for compliance with federal, state, and local laws regarding storage, handling, transportation, and disposal of hazardous wastes.
- This BMP does not cover aerially deposited lead (ADL) soils. For ADL soils refer to WM-7, Contaminated Soil Management.

Implementation

The following steps will help reduce stormwater pollution from hazardous wastes:

Material Use

- Wastes should be stored in sealed containers constructed of a suitable material and should be labeled as required by Title 22 CCR, Division 4.5 and 49 CFR Parts 172, 173, 178, and 179.
- All hazardous waste should be stored, transported, and disposed as required in Title 22 CCR, Division 4.5 and 49 CFR 261-263.
- Waste containers should be stored in temporary containment facilities that should comply with the following requirements:
  - Temporary containment facility should provide for a spill containment volume equal to 1.5 times the volume of all containers able to contain precipitation from a 25 year storm event, plus the greater of 10% of the aggregate volume of all containers or 100% of the capacity of the largest tank within its boundary, whichever is greater.
  - Temporary containment facility should be impervious to the materials stored there for a minimum contact time of 72 hours.
  - Temporary containment facilities should be maintained free of accumulated rainwater and spills. In the event of spills or leaks, accumulated rainwater and spills should be placed into drums after each rainfall. These liquids should be handled as a hazardous waste unless testing determines them to be non-hazardous. Non-hazardous liquids should be sent to an approved disposal site.
  - Sufficient separation should be provided between stored containers to allow for spill cleanup and emergency response access.

- Incompatible materials, such as chlorine and ammonia, should not be stored in the same temporary containment facility.
- Throughout the rainy season, temporary containment facilities should be covered during non-working days, and prior to rain events. Covered facilities may include use of plastic tarps for small facilities or constructed roofs with overhangs.

- Drums should not be overfilled and wastes should not be mixed.
- Unless watertight, containers of dry waste should be stored on pallets.
- Do not over-apply herbicides and pesticides. Prepare only the amount needed. Follow the recommended usage instructions. Over application is expensive and environmentally harmful. Apply surface dressings in several smaller applications, as opposed to one large application. Allow time for infiltration and avoid excess material being carried offsite by runoff. Do not apply these chemicals just before it rains. People applying pesticides must be certified in accordance with federal and state regulations.
- Paint brushes and equipment for water and oil based paints should be cleaned within a contained area and should not be allowed to contaminate site soils, watercourses, or drainage systems. Waste paints, thinners, solvents, residues, and sludges that cannot be recycled or reused should be disposed of as hazardous waste. When thoroughly dry, latex paint and paint cans, used brushes, rags, absorbent materials, and drop cloths should be disposed of as solid waste.
- Do not clean out brushes or rinse paint containers into the dirt, street, gutter, storm drain, or stream. "Paint out" brushes as much as possible. Rinse water-based paints to the sanitary sewer. Filter and reuse thinners and solvents. Dispose of excess oil-based paints and sludge as hazardous waste.
- The following actions should be taken with respect to temporary contaminant:
  - Ensure that adequate hazardous waste storage volume is available.
  - Ensure that hazardous waste collection containers are conveniently located.
  - Designate hazardous waste storage areas onsite away from storm drains or watercourses and away from moving vehicles and equipment to prevent accidental spills.
  - Minimize production or generation of hazardous materials and hazardous waste on the job site.
  - Use containment berms in fueling and maintenance areas and where the potential for spills is high.
  - Segregate potentially hazardous waste from non-hazardous construction site debris.
  - Keep liquid or semi-liquid hazardous waste in appropriate containers (closed drums or similar) and under cover.

- Clearly label all hazardous waste containers with the waste being stored and the date of accumulation.
- Place hazardous waste containers in secondary containment.
- Do not allow potentially hazardous waste materials to accumulate on the ground.
- Do not mix wastes.
- Use all of the product before disposing of the container.
- Do not remove the original product label; it contains important safety and disposal information.

Waste Recycling Disposal

- Select designated hazardous waste collection areas onsite.
- Hazardous materials and wastes should be stored in covered containers and protected from vandalism.
- Place hazardous waste containers in secondary containment.
- Do not mix wastes, this can cause chemical reactions, making recycling impossible and complicating disposal.
- Recycle any useful materials such as used oil or water-based paint.
- Make sure that toxic liquid wastes (used oils, solvents, and paints) and chemicals (acids, pesticides, additives, curing compounds) are not disposed of in dumpsters designated for construction debris.
- Arrange for regular waste collection before containers overflow.
- Make sure that hazardous waste (e.g., excess oil-based paint and sludge) is collected, removed, and disposed of only at authorized disposal areas.

Disposal Procedures

- Waste should be disposed of by a licensed hazardous waste transporter at an authorized and licensed disposal facility or recycling facility utilizing properly completed Uniform Hazardous Waste Manifest forms.
- A Department of Health Services certified laboratory should sample waste to determine the appropriate disposal facility.
- Properly dispose of rainwater in secondary containment that may have mixed with hazardous waste.
- Attention is directed to "Hazardous Material", "Contaminated Material", and "Aerially Deposited Lead" of the contract documents regarding the handling and disposal of hazardous materials.

Education

- Educate employees and subcontractors on hazardous waste storage and disposal procedures.
- Educate employees and subcontractors on potential dangers to humans and the environment from hazardous wastes.
- Instruct employees and subcontractors on safety procedures for common construction site hazardous wastes.
- Instruct employees and subcontractors in identification of hazardous and solid waste.
- Hold regular meetings to discuss and reinforce hazardous waste management procedures (incorporate into regular safety meetings).
- The contractor's superintendent or representative should oversee and enforce proper hazardous waste management procedures and practices.
- Make sure that hazardous waste is collected, removed, and disposed of only at authorized disposal areas.
- Warning signs should be placed in areas recently treated with chemicals.
- Place a stockpile of spill cleanup materials where it will be readily accessible.
- If a container does spill, clean up immediately.

Costs

All of the above are low cost measures.

Inspection and Maintenance

- Inspect and verify that activity–based BMPs are in place prior to the commencement of associated activities. While activities associated with the BMP are under way, inspect BMPs in accordance with General Permit requirements for the associated project type and risk level. It is recommended that at a minimum, BMPs be inspected weekly, prior to forecasted rain events, daily during extended rain events, and after the conclusion of rain events..
- Inspect BMPs subject to non-stormwater discharge daily while non-stormwater discharges occur
- Hazardous waste should be regularly collected.
- A foreman or construction supervisor should monitor onsite hazardous waste storage and disposal procedures.
- Waste storage areas should be kept clean, well organized, and equipped with ample cleanup supplies as appropriate for the materials being stored.
- Perimeter controls, containment structures, covers, and liners should be repaired or replaced as needed to maintain proper function.

- Hazardous spills should be cleaned up and reported in conformance with the applicable Material Safety Data Sheet (MSDS) and the instructions posted at the project site.
- The National Response Center, at (800) 424-8802, should be notified of spills of federal reportable quantities in conformance with the requirements in 40 CFR parts 110, 117, and 302. Also notify the Governors Office of Emergency Services Warning Center at (916) 845-8911.
- A copy of the hazardous waste manifests should be provided.

References

Blueprint for a Clean Bay: Best Management Practices to Prevent Stormwater Pollution from Construction Related Activities; Santa Clara Valley Nonpoint Source Pollution Control Program, 1995.

Processes, Procedures and Methods to Control Pollution Resulting from All Construction Activity, 430/9-73-007, USEPA, 1973.

Stormwater Quality Handbooks - Construction Site Best Management Practices (BMPs) Manual, State of California Department of Transportation (Caltrans), November 2000.

Stormwater Management for Construction Activities; Developing Pollution Prevention Plans and Best Management Practice, EPA 832-R-92005; USEPA, April 1992.

Contaminated Soil Management WM-7

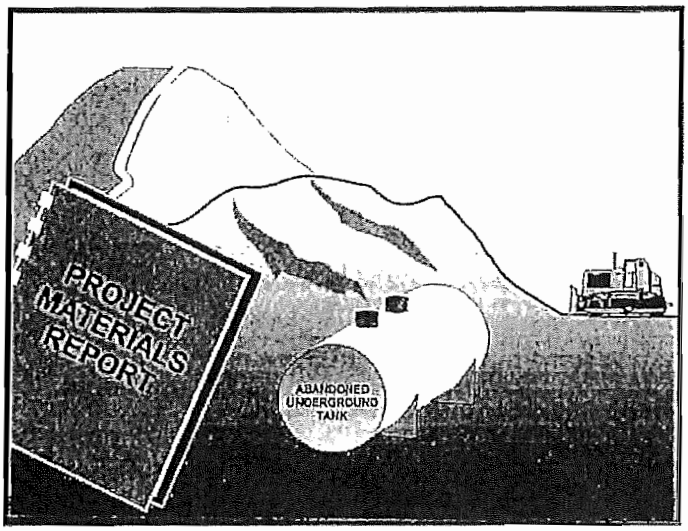

Categories		
EC	Erosion Control	
SE	Sediment Control	
TC	Tracking Control	
WE	Wind Erosion Control	
NS	Non-Stormwater Management Control	
WM	Waste Management and Materials Pollution Control	☑

Legend:
☑ **Primary Objective**
☒ **Secondary Objective**

Description and Purpose

Prevent or reduce the discharge of pollutants to stormwater from contaminated soil and highly acidic or alkaline soils by conducting pre-construction surveys, inspecting excavations regularly, and remediating contaminated soil promptly.

Targeted Constituents	
Sediment	
Nutrients	☑
Trash	☑
Metals	☑
Bacteria	☑
Oil and Grease	☑
Organics	☑

Suitable Applications

Contaminated soil management is implemented on construction projects in highly urbanized or industrial areas where soil contamination may have occurred due to spills, illicit discharges, aerial deposition, past use and leaks from underground storage tanks.

Potential Alternatives

None

Limitations

Contaminated soils that cannot be treated onsite must be disposed of offsite by a licensed hazardous waste hauler. The presence of contaminated soil may indicate contaminated water as well. See NS-2, Dewatering Operations, for more information.

The procedures and practices presented in this BMP are general. The contractor should identify appropriate practices and procedures for the specific contaminants known to exist or discovered onsite.

Implementation

Most owners and developers conduct pre-construction environmental assessments as a matter of routine. Contaminated soils are often identified during project planning and development with known locations identified in the plans, specifications and in the SWPPP. The contractor should review applicable reports and investigate appropriate call-outs in the

CASQA
CALIFORNIA STORMWATER QUALITY ASSOCIATION

plans, specifications, and SWPPP. Recent court rulings holding contractors liable for cleanup costs when they unknowingly move contaminated soil highlight the need for contractors to confirm a site assessment is completed before earth moving begins.

The following steps will help reduce stormwater pollution from contaminated soil:

- Conduct thorough, pre-construction inspections of the site and review documents related to the site. If inspection or reviews indicated presence of contaminated soils, develop a plan before starting work.
- Look for contaminated soil as evidenced by discoloration, odors, differences in soil properties, abandoned underground tanks or pipes, or buried debris.
- Prevent leaks and spills. Contaminated soil can be expensive to treat and dispose of properly. However, addressing the problem before construction is much less expensive than after the structures are in place.
- The contractor may further identify contaminated soils by investigating:
  - Past site uses and activities
  - Detected or undetected spills and leaks
  - Acid or alkaline solutions from exposed soil or rock formations high in acid or alkaline forming elements
  - Contaminated soil as evidenced by discoloration, odors, differences in soil properties, abandoned underground tanks or pipes, or buried debris.
  - Suspected soils should be tested at a certified laboratory.

Education

- Have employees and subcontractors complete a safety training program which meets 29 CFR 1910.120 and 8 CCR 5192 covering the potential hazards as identified, prior to performing any excavation work at the locations containing material classified as hazardous.
- Educate employees and subcontractors in identification of contaminated soil and on contaminated soil handling and disposal procedures.
- Hold regular meetings to discuss and reinforce disposal procedures (incorporate into regular safety meetings).

Handling Procedures for Material with Aerially Deposited Lead (ADL)

- Materials from areas designated as containing (ADL) may, if allowed by the contract special provisions, be excavated, transported, and used in the construction of embankments and/or backfill.
- Excavation, transportation, and placement operations should result in no visible dust.
- Caution should be exercised to prevent spillage of lead containing material during transport.

- Quality should be monitored during excavation of soils contaminated with lead.

Handling Procedures for Contaminated Soils

- Minimize onsite storage. Contaminated soil should be disposed of properly in accordance with all applicable regulations. All hazardous waste storage will comply with the requirements in Title 22, CCR, Sections 66265.250 to 66265.260.
- Test suspected soils at an approved certified laboratory.
- Work with the local regulatory agencies to develop options for treatment or disposal if the soil is contaminated.
- Avoid temporary stockpiling of contaminated soils or hazardous material.
- Take the following precautions if temporary stockpiling is necessary:
  - Cover the stockpile with plastic sheeting or tarps.
  - Install a berm around the stockpile to prevent runoff from leaving the area.
  - Do not stockpile in or near storm drains or watercourses.
- Remove contaminated material and hazardous material on exteriors of transport vehicles and place either into the current transport vehicle or into the excavation prior to the vehicle leaving the exclusion zone.
- Monitor the air quality continuously during excavation operations at all locations containing hazardous material.
- Procure all permits and licenses, pay all charges and fees, and give all notices necessary and incident to the due and lawful prosecution of the work, including registration for transporting vehicles carrying the contaminated material and the hazardous material.
- Collect water from decontamination procedures and treat or dispose of it at an appropriate disposal site.
- Collect non-reusable protective equipment, once used by any personnel, and dispose of at an appropriate disposal site.
- Install temporary security fence to surround and secure the exclusion zone. Remove fencing when no longer needed.
- Excavate, transport, and dispose of contaminated material and hazardous material in accordance with the rules and regulations of the following agencies (the specifications of these agencies supersede the procedures outlined in this BMP):
  - United States Department of Transportation (USDOT)
  - United States Environmental Protection Agency (USEPA)
  - California Environmental Protection Agency (CAL-EPA)

- California Division of Occupation Safety and Health Administration (CAL-OSHA)
- Local regulatory agencies

Procedures for Underground Storage Tank Removals

- Prior to commencing tank removal operations, obtain the required underground storage tank removal permits and approval from the federal, state, and local agencies that have jurisdiction over such work.
- To determine if it contains hazardous substances, arrange to have tested, any liquid or sludge found in the underground tank prior to its removal.
- Following the tank removal, take soil samples beneath the excavated tank and perform analysis as required by the local agency representative(s).
- The underground storage tank, any liquid or sludge found within the tank, and all contaminated substances and hazardous substances removed during the tank removal and transported to disposal facilities permitted to accept such waste.

Water Control

- All necessary precautions and preventive measures should be taken to prevent the flow of water, including ground water, from mixing with hazardous substances or underground storage tank excavations. Such preventative measures may consist of, but are not limited to, berms, cofferdams, grout curtains, freeze walls, and seal course concrete or any combination thereof.
- If water does enter an excavation and becomes contaminated, such water, when necessary to proceed with the work, should be discharged to clean, closed top, watertight transportable holding tanks, treated, and disposed of in accordance with federal, state, and local laws.

Costs

Prevention of leaks and spills is inexpensive. Treatment or disposal of contaminated soil can be quite expensive.

Inspection and Maintenance

- Inspect and verify that activity–based BMPs are in place prior to the commencement of associated activities. While activities associated with the BMP are under way, inspect BMPs in accordance with General Permit requirements for the associated project type and risk level. It is recommended that at a minimum, BMPs be inspected weekly, prior to forecasted rain events, daily during extended rain events, and after the conclusion of rain events.
- Arrange for contractor's Water Pollution Control Manager, foreman, and/or construction supervisor to monitor onsite contaminated soil storage and disposal procedures.
- Monitor air quality continuously during excavation operations at all locations containing hazardous material.
- Coordinate contaminated soils and hazardous substances/waste management with the appropriate federal, state, and local agencies.

- Implement WM-4, Spill Prevention and Control, to prevent leaks and spills as much as possible.

References

Blueprint for a Clean Bay: Best Management Practices to Prevent Stormwater Pollution from Construction Related Activities; Santa Clara Valley Nonpoint Source Pollution Control Program, 1995.

Processes, Procedures and Methods to Control Pollution Resulting from All Construction Activity, 430/9-73-007, USEPA, 1973.

Stormwater Quality Handbooks - Construction Site Best Management Practices (BMPs) Manual, State of California Department of Transportation (Caltrans), November 2000.

Stormwater Management for Construction Activities; Developing Pollution Prevention Plans and Best Management Practice, EPA 832-R-92005; USEPA, April 1992.

Concrete Waste Management WM-8

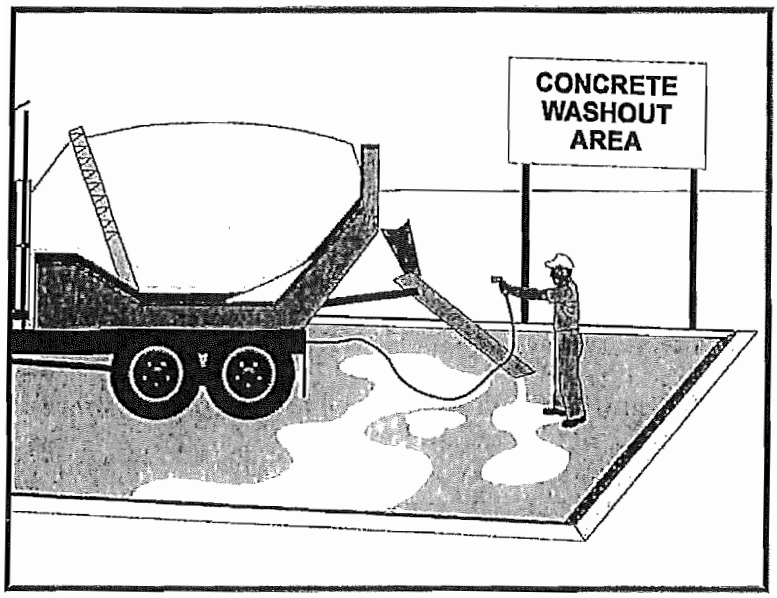

Categories

EC	Erosion Control	
SE	Sediment Control	
TC	Tracking Control	
WE	Wind Erosion Control	
NS	Non-Stormwater Management Control	☒
WM	Waste Management and Materials Pollution Control	☑

Legend:

☑ **Primary Category**

☒ **Secondary Category**

Targeted Constituents

Sediment	☑
Nutrients	
Trash	
Metals	☑
Bacteria	
Oil and Grease	
Organics	

Potential Alternatives

None

Description and Purpose

Prevent the discharge of pollutants to stormwater from concrete waste by conducting washout onsite or offsite in a designated area, and by employee and subcontractor training.

The General Permit incorporates Numeric Effluent Limits (NEL) and Numeric Action Levels (NAL) for pH (see Section 2 of this handbook to determine your project's risk level and if you are subject to these requirements).

Many types of construction materials, including mortar, concrete, stucco, cement and block and their associated wastes have basic chemical properties that can raise pH levels outside of the permitted range. Additional care should be taken when managing these materials to prevent them from coming into contact with stormwater flows and raising pH to levels outside the accepted range.

Suitable Applications

Concrete waste management procedures and practices are implemented on construction projects where:

- Concrete is used as a construction material or where concrete dust and debris result from demolition activities.
- Slurries containing portland cement concrete (PCC) are generated, such as from saw cutting, coring, grinding, grooving, and hydro-concrete demolition.

CASQA
CALIFORNIA STORMWATER QUALITY ASSOCIATION

- Concrete trucks and other concrete-coated equipment are washed onsite.
- Mortar-mixing stations exist.
- Stucco mixing and spraying .
- See also NS-8, Vehicle and Equipment Cleaning.

Limitations

- Offsite washout of concrete wastes may not always be possible.
- Multiple washouts may be needed to assure adequate capacity and to allow for evaporation.

Implementation

The following steps will help reduce stormwater pollution from concrete wastes:

- Incorporate requirements for concrete waste management into material supplier and subcontractor agreements.
- Store dry and wet materials under cover, away from drainage areas. Refer to WM-1, Material Delivery and Storage for more information.
- Avoid mixing excess amounts of concrete.
- Perform washout of concrete trucks in designated areas only, where washout will not reach stormwater.
- Do not wash out concrete trucks into storm drains, open ditches, streets, streams or onto the ground. Trucks should always be washed out into designated facilities.
- Do not allow excess concrete to be dumped onsite, except in designated areas.
- For onsite washout:
  - On larger sites, it is recommended to locate washout areas at least 50 feet from storm drains, open ditches, or water bodies. Do not allow runoff from this area by constructing a temporary pit or bermed area large enough for liquid and solid waste.
  - Washout wastes into the temporary washout where the concrete can set, be broken up, and then disposed properly.
  - Washout should be lined so there is no discharge into the underlying soil.
- Do not wash sweepings from exposed aggregate concrete into the street or storm drain. Collect and return sweepings to aggregate base stockpile or dispose in the trash.
- See typical concrete washout installation details at the end of this fact sheet.

Education

- Educate employees, subcontractors, and suppliers on the concrete waste management techniques described herein.

- Arrange for contractor's superintendent or representative to oversee and enforce concrete waste management procedures.
- Discuss the concrete management techniques described in this BMP (such as handling of concrete waste and washout) with the ready-mix concrete supplier before any deliveries are made.

Concrete Demolition Wastes

- Stockpile concrete demolition waste in accordance with BMP WM-3, Stockpile Management.
- Dispose of or recycle hardened concrete waste in accordance with applicable federal, state or local regulations.

Concrete Slurry Wastes

- PCC and AC waste should not be allowed to enter storm drains or watercourses.
- PCC and AC waste should be collected and disposed of or placed in a temporary concrete washout facility (as described in Onsite Temporary Concrete Washout Facility, Concrete Transit Truck Washout Procedures, below).
- A foreman or construction supervisor should monitor onsite concrete working tasks, such as saw cutting, coring, grinding and grooving to ensure proper methods are implemented.
- Saw-cut concrete slurry should not be allowed to enter storm drains or watercourses. Residue from grinding operations should be picked up by means of a vacuum attachment to the grinding machine or by sweeping. Saw cutting residue should not be allowed to flow across the pavement and should not be left on the surface of the pavement. See also NS-3, Paving and Grinding Operations; and WM-10, Liquid Waste Management.
- Concrete slurry residue should be disposed in a temporary washout facility (as described in Onsite Temporary Concrete Washout Facility, Concrete Transit Truck Washout Procedures, below) and allowed to dry. Dispose of dry slurry residue in accordance with WM-5, Solid Waste Management.

Onsite Temporary Concrete Washout Facility, Transit Truck Washout Procedures

- Temporary concrete washout facilities should be located a minimum of 50 ft from storm drain inlets, open drainage facilities, and watercourses. Each facility should be located away from construction traffic or access areas to prevent disturbance or tracking.
- A sign should be installed adjacent to each washout facility to inform concrete equipment operators to utilize the proper facilities.
- Temporary concrete washout facilities should be constructed above grade or below grade at the option of the contractor. Temporary concrete washout facilities should be constructed and maintained in sufficient quantity and size to contain all liquid and concrete waste generated by washout operations.

- Temporary washout facilities should have a temporary pit or bermed areas of sufficient volume to completely contain all liquid and waste concrete materials generated during washout procedures.
- Temporary washout facilities should be lined to prevent discharge to the underlying ground or surrounding area.
- Washout of concrete trucks should be performed in designated areas only.
- Only concrete from mixer truck chutes should be washed into concrete wash out.
- Concrete washout from concrete pumper bins can be washed into concrete pumper trucks and discharged into designated washout area or properly disposed of or recycled offsite.
- Once concrete wastes are washed into the designated area and allowed to harden, the concrete should be broken up, removed, and disposed of per WM-5, Solid Waste Management. Dispose of or recycle hardened concrete on a regular basis.
- Temporary Concrete Washout Facility (Type Above Grade)
  - Temporary concrete washout facility (type above grade) should be constructed as shown on the details at the end of this BMP, with a recommended minimum length and minimum width of 10 ft; however, smaller sites or jobs may only need a smaller washout facility. With any washout, always maintain a sufficient quantity and volume to contain all liquid and concrete waste generated by washout operations.
  - Materials used to construct the washout area should conform to the provisions detailed in their respective BMPs (e.g., SE-8 Sandbag Barrier).
  - Plastic lining material should be a minimum of 10 mil in polyethylene sheeting and should be free of holes, tears, or other defects that compromise the impermeability of the material.
  - Alternatively, portable removable containers can be used as above grade concrete washouts. Also called a "roll-off"; this concrete washout facility should be properly sealed to prevent leakage, and should be removed from the site and replaced when the container reaches 75% capacity.
- Temporary Concrete Washout Facility (Type Below Grade)
  - Temporary concrete washout facilities (type below grade) should be constructed as shown on the details at the end of this BMP, with a recommended minimum length and minimum width of 10 ft. The quantity and volume should be sufficient to contain all liquid and concrete waste generated by washout operations.
  - Lath and flagging should be commercial type.
  - Plastic lining material should be a minimum of 10 mil polyethylene sheeting and should be free of holes, tears, or other defects that compromise the impermeability of the material.

- The base of a washout facility should be free of rock or debris that may damage a plastic liner.

Removal of Temporary Concrete Washout Facilities

- When temporary concrete washout facilities are no longer required for the work, the hardened concrete should be removed and properly disposed or recycled in accordance with federal, state or local regulations. Materials used to construct temporary concrete washout facilities should be removed from the site of the work and properly disposed or recycled in accordance with federal, state or local regulations..

- Holes, depressions or other ground disturbance caused by the removal of the temporary concrete washout facilities should be backfilled and repaired.

Costs

All of the above are low cost measures. Roll-off concrete washout facilities can be more costly than other measures due to removal and replacement; however, provide a cleaner alternative to traditional washouts. The type of washout facility, size, and availability of materials will determine the cost of the washout.

Inspection and Maintenance

- BMPs must be inspected in accordance with General Permit requirements for the associated project type and risk level. It is recommended that at a minimum, BMPs be inspected weekly, prior to forecasted rain events, daily during extended rain events, and after the conclusion of rain events.

- Temporary concrete washout facilities should be maintained to provide adequate holding capacity with a minimum freeboard of 4 in. for above grade facilities and 12 in. for below grade facilities. Maintaining temporary concrete washout facilities should include removing and disposing of hardened concrete and returning the facilities to a functional condition. Hardened concrete materials should be removed and properly disposed or recycled in accordance with federal, state or local regulations.

- Washout facilities must be cleaned, or new facilities must be constructed and ready for use once the washout is 75% full.

- Inspect washout facilities for damage (e.g. torn liner, evidence of leaks, signage, etc.). Repair all identified damage.

References

Blueprint for a Clean Bay: Best Management Practices to Prevent Stormwater Pollution from Construction Related Activities; Santa Clara Valley Nonpoint Source Pollution Control Program, 1995.

Stormwater Quality Handbooks - Construction Site Best Management Practices (BMPs) Manual, State of California Department of Transportation (Caltrans), November 2000, Updated March 2003.

Stormwater Management for Construction Activities; Developing Pollution Prevention Plans and Best Management Practice, EPA 832-R-92005; USEPA, April 1992.

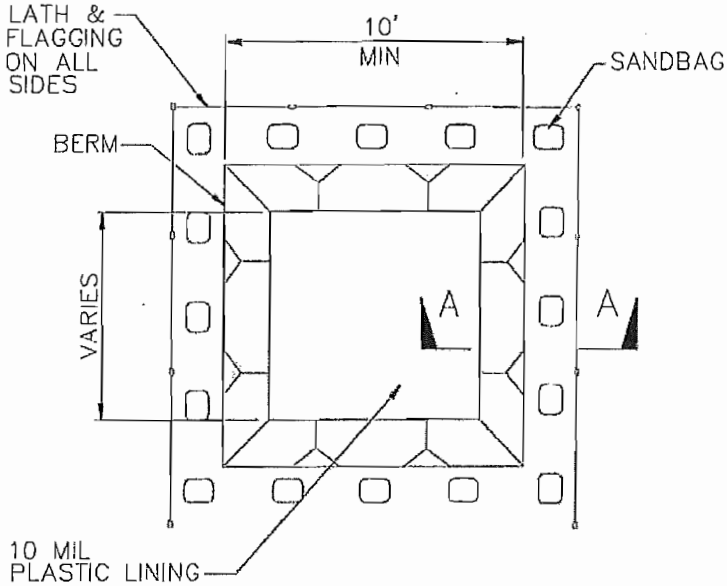

PLAN
NOT TO SCALE
TYPE "BELOW GRADE"

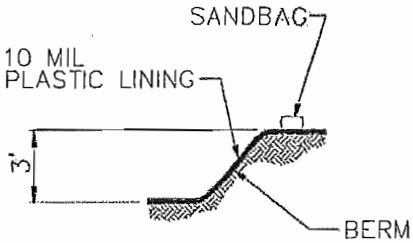

SECTION A–A
NOT TO SCALE

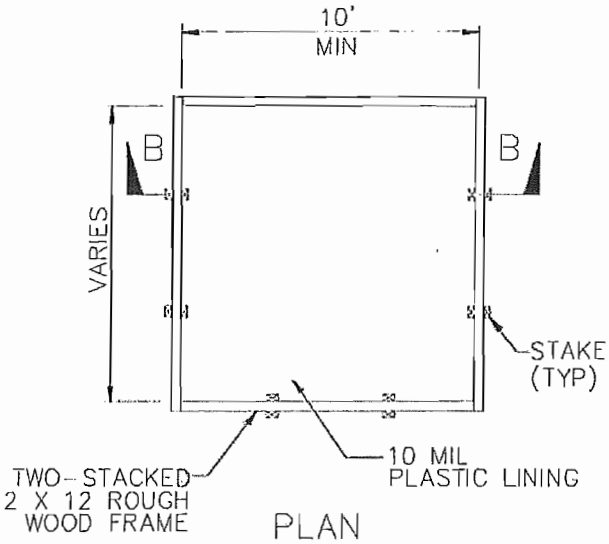

PLAN
NOT TO SCALE
TYPE "ABOVE GRADE"

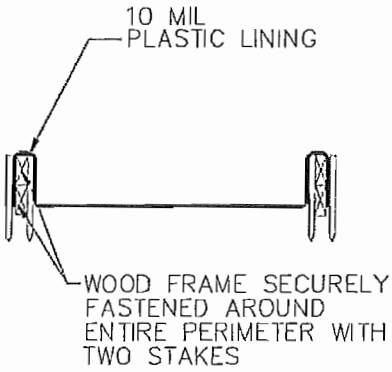

SECTION B–B
NOT TO SCALE

NOTES

1. ACTUAL LAYOUT DETERMINED IN FIELD.
2. THE CONCRETE WASHOUT SIGN SHALL BE INSTALLED WITHIN 30 FT. OF THE TEMPORARY CONCRETE WASHOUT FACILITY.

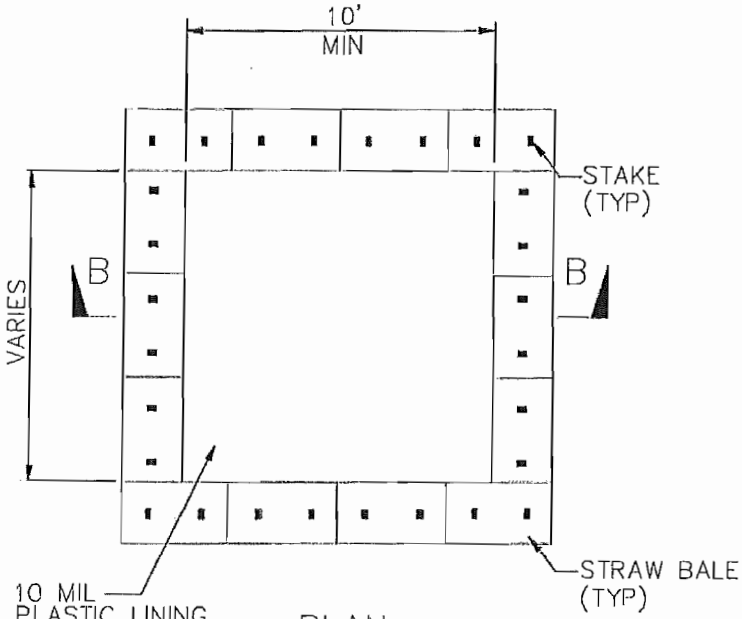

PLAN
NOT TO SCALE
TYPE "ABOVE GRADE"
WITH STRAW BALES

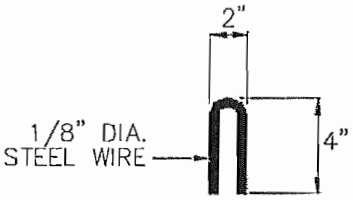

STAPLE DETAIL

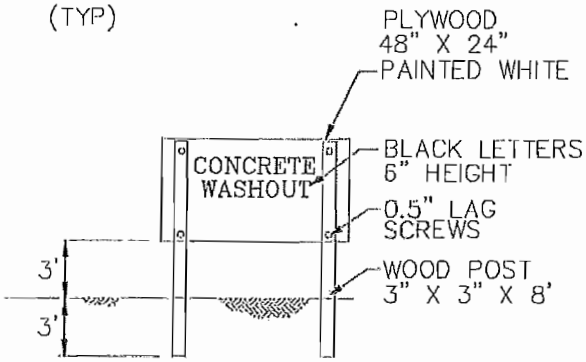

CONCRETE WASHOUT
SIGN DETAIL
(OR EQUIVALENT)

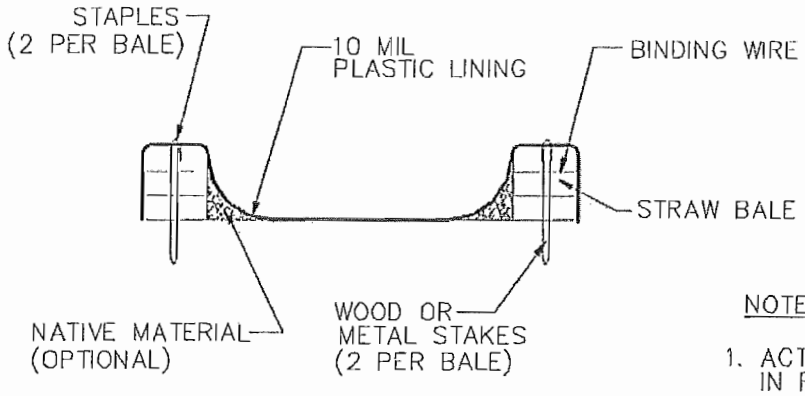

SECTION B–B
NOT TO SCALE

NOTES

1. ACTUAL LAYOUT DETERMINED IN FIELD.
2. THE CONCRETE WASHOUT SIGN SHALL BE INSTALLED WITHIN 30 FT. OF THE TEMPORARY CONCRETE WASHOUT FACILITY.

Sanitary/Septic Waste Management WM-9

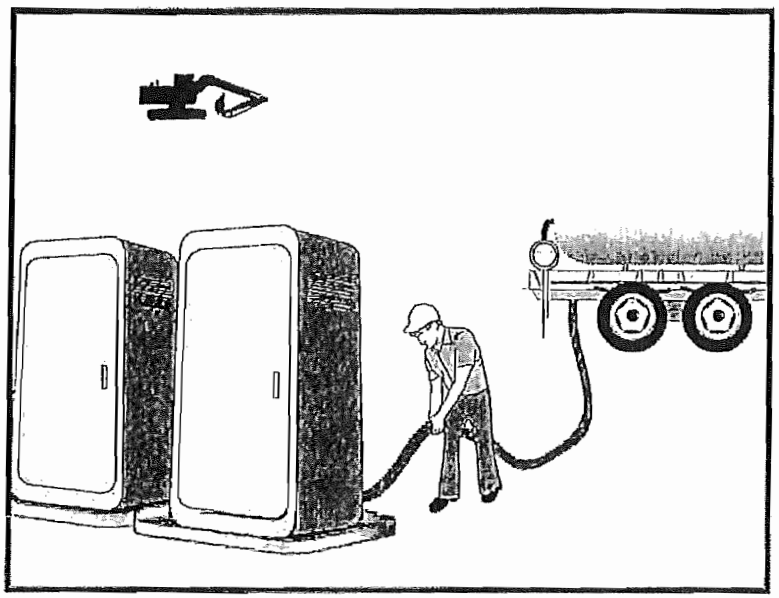

Categories		
EC	Erosion Control	
SE	Sediment Control	
TC	Tracking Control	
WE	Wind Erosion Control	
NS	Non-Stormwater Management Control	
WM	Waste Management and Materials Pollution Control	☑

Legend:

☑ **Primary Category**

☒ **Secondary Category**

Targeted Constituents	
Sediment	
Nutrients	☑
Trash	☑
Metals	
Bacteria	☑
Oil and Grease	
Organics	☑

Potential Alternatives

None

Description and Purpose

Proper sanitary and septic waste management prevent the discharge of pollutants to stormwater from sanitary and septic waste by providing convenient, well-maintained facilities, and arranging for regular service and disposal.

Suitable Applications

Sanitary septic waste management practices are suitable for use at all construction sites that use temporary or portable sanitary and septic waste systems.

Limitations

None identified.

Implementation

Sanitary or septic wastes should be treated or disposed of in accordance with state and local requirements. In many cases, one contract with a local facility supplier will be all that it takes to make sure sanitary wastes are properly disposed.

Storage and Disposal Procedures

- Temporary sanitary facilities should be located away from drainage facilities, watercourses, and from traffic circulation. If site conditions allow, place portable facilities a minimum of 50 feet from drainage conveyances and traffic areas. When subjected to high winds or risk of high winds, temporary sanitary facilities should be secured to prevent overturning.

- Temporary sanitary facilities must be equipped with containment to prevent discharge of pollutants to the stormwater drainage system of the receiving water.
- Consider safety as well as environmental implications before placing temporary sanitary facilities.
- Wastewater should not be discharged or buried within the project site.
- Sanitary and septic systems that discharge directly into sanitary sewer systems, where permissible, should comply with the local health agency, city, county, and sewer district requirements.
- Only reputable, licensed sanitary and septic waste haulers should be used.
- Sanitary facilities should be located in a convenient location.
- Temporary septic systems should treat wastes to appropriate levels before discharging.
- If using an onsite disposal system (OSDS), such as a septic system, local health agency requirements must be followed.
- Temporary sanitary facilities that discharge to the sanitary sewer system should be properly connected to avoid illicit discharges.
- Sanitary and septic facilities should be maintained in good working order by a licensed service.
- Regular waste collection by a licensed hauler should be arranged before facilities overflow.
- If a spill does occur from a temporary sanitary facility, follow federal, state and local regulations for containment and clean-up.

Education

- Educate employees, subcontractors, and suppliers on sanitary and septic waste storage and disposal procedures.
- Educate employees, subcontractors, and suppliers of potential dangers to humans and the environment from sanitary and septic wastes.
- Instruct employees, subcontractors, and suppliers in identification of sanitary and septic waste.
- Hold regular meetings to discuss and reinforce the use of sanitary facilities (incorporate into regular safety meetings).
- Establish a continuing education program to indoctrinate new employees.

Costs

All of the above are low cost measures.

Inspection and Maintenance

- BMPs must be inspected in accordance with General Permit requirements for the associated project type and risk level. It is recommended that at a minimum, BMPs be inspected weekly, prior to forecasted rain events, daily during extended rain events, and after the conclusion of rain events.
- Arrange for regular waste collection.
- If high winds are expected, portable sanitary facilities must be secured with spikes or weighed down to prevent over turning.
- If spills or leaks from sanitary or septic facilities occur that are not contained and discharge from the site, non-visible sampling of site discharge may be required. Refer to the General Permit or to your project specific Construction Site Monitoring Plan to determine if and where sampling is required.

References

Stormwater Quality Handbooks - Construction Site Best Management Practices (BMPs) Manual, State of California Department of Transportation (Caltrans), March 2003.

Stormwater Management for Construction Activities; Developing Pollution Prevention Plans and Best Management Practice, EPA 832-R-92005; USEPA, April 1992.

Liquid Waste Management WM-10

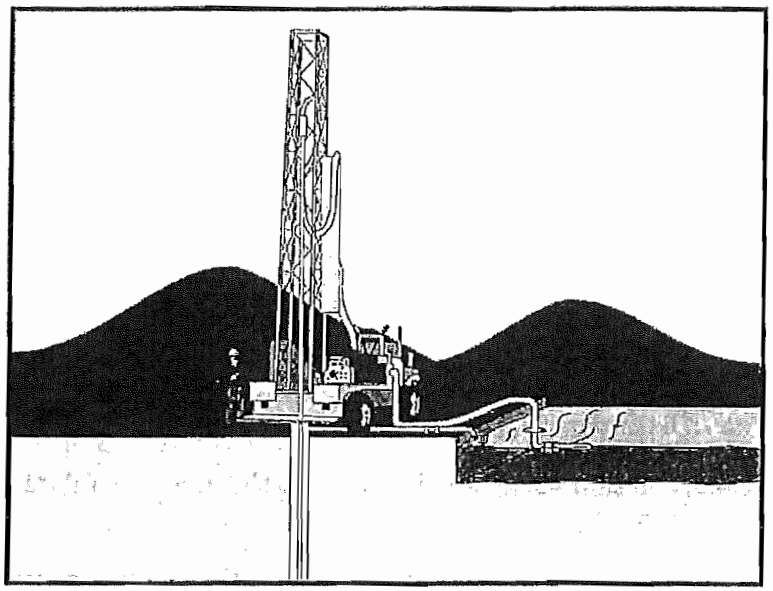

Categories		
EC	Erosion Control	
SE	Sediment Control	
TC	Tracking Control	
WE	Wind Erosion Control	
NS	Non-Stormwater Management Control	
WM	Waste Management and Materials Pollution Control	☑

Legend:

☑ **Primary Objective**

☒ **Secondary Objective**

Targeted Constituents	
Sediment	☑
Nutrients	☑
Trash	☑
Metals	☑
Bacteria	
Oil and Grease	☑
Organics	

Potential Alternatives

None

Description and Purpose

Liquid waste management includes procedures and practices to prevent discharge of pollutants to the storm drain system or to watercourses as a result of the creation, collection, and disposal of non-hazardous liquid wastes.

Suitable Applications

Liquid waste management is applicable to construction projects that generate any of the following non-hazardous by-products, residuals, or wastes:

- Drilling slurries and drilling fluids
- Grease-free and oil-free wastewater and rinse water
- Dredgings
- Other non-stormwater liquid discharges not permitted by separate permits

Limitations

- Disposal of some liquid wastes may be subject to specific laws and regulations or to requirements of other permits secured for the construction project (e.g., NPDES permits, Army Corps permits, Coastal Commission permits, etc.).
- Liquid waste management does not apply to dewatering operations (NS-2 Dewatering Operations), solid waste management (WM-5, Solid Waste Management), hazardous wastes (WM-6, Hazardous Waste Management), or concrete slurry residue (WM-8, Concrete Waste

CASQA
CALIFORNIA STORMWATER QUALITY ASSOCIATION

Management).

- Typical permitted non-stormwater discharges can include: water line flushing; landscape irrigation; diverted stream flows; rising ground waters; uncontaminated pumped ground water; discharges from potable water sources; foundation drains; irrigation water; springs; water from crawl space pumps; footing drains; lawn watering; flows from riparian habitats and wetlands; and discharges or flows from emergency fire fighting activities.

Implementation

General Practices

- Instruct employees and subcontractors how to safely differentiate between non-hazardous liquid waste and potential or known hazardous liquid waste.
- Instruct employees, subcontractors, and suppliers that it is unacceptable for any liquid waste to enter any storm drainage device, waterway, or receiving water.
- Educate employees and subcontractors on liquid waste generating activities and liquid waste storage and disposal procedures.
- Hold regular meetings to discuss and reinforce disposal procedures (incorporate into regular safety meetings).
- Verify which non-stormwater discharges are permitted by the statewide NPDES permit; different regions might have different requirements not outlined in this permit.
- Apply NS-8, Vehicle and Equipment Cleaning for managing wash water and rinse water from vehicle and equipment cleaning operations.

Containing Liquid Wastes

- Drilling residue and drilling fluids should not be allowed to enter storm drains and watercourses and should be disposed of.
- If an appropriate location is available, drilling residue and drilling fluids that are exempt under Title 23, CCR § 2511(g) may be dried by infiltration and evaporation in a containment facility constructed in conformance with the provisions concerning the Temporary Concrete Washout Facilities detailed in WM-8, Concrete Waste Management.
- Liquid wastes generated as part of an operational procedure, such as water-laden dredged material and drilling mud, should be contained and not allowed to flow into drainage channels or receiving waters prior to treatment.
- Liquid wastes should be contained in a controlled area such as a holding pit, sediment basin, roll-off bin, or portable tank.
- Containment devices must be structurally sound and leak free.
- Containment devices must be of sufficient quantity or volume to completely contain the liquid wastes generated.

- Precautions should be taken to avoid spills or accidental releases of contained liquid wastes. Apply the education measures and spill response procedures outlined in WM-4, Spill Prevention and Control.

- Containment areas or devices should not be located where accidental release of the contained liquid can threaten health or safety or discharge to water bodies, channels, or storm drains.

Capturing Liquid Wastes

- Capture all liquid wastes that have the potential to affect the storm drainage system (such as wash water and rinse water from cleaning walls or pavement), before they run off a surface.

- Do not allow liquid wastes to flow or discharge uncontrolled. Use temporary dikes or berms to intercept flows and direct them to a containment area or device for capture.

- Use a sediment trap (SE-3, Sediment Trap) for capturing and treating sediment laden liquid waste or capture in a containment device and allow sediment to settle.

Disposing of Liquid Wastes

- A typical method to handle liquid waste is to dewater the contained liquid waste, using procedures such as described in NS-2, Dewatering Operations, and SE-2, Sediment Basin, and dispose of resulting solids per WM-5, Solid Waste Management.

- Methods of disposal for some liquid wastes may be prescribed in Water Quality Reports, NPDES permits, Environmental Impact Reports, 401 or 404 permits, and local agency discharge permits, etc. Review the SWPPP to see if disposal methods are identified.

- Liquid wastes, such as from dredged material, may require testing and certification whether it is hazardous or not before a disposal method can be determined.

- For disposal of hazardous waste, see WM-6, Hazardous Waste Management.

- If necessary, further treat liquid wastes prior to disposal. Treatment may include, though is not limited to, sedimentation, filtration, and chemical neutralization.

Costs

Prevention costs for liquid waste management are minimal. Costs increase if cleanup or fines are involved.

Inspection and Maintenance

- Inspect and verify that activity–based BMPs are in place prior to the commencement of associated activities. While activities associated with the BMP are under way, inspect weekly during the rainy season and of two-week intervals in the non-rainy season to verify continued BMP implementation.

- Inspect BMPs subject to non-stormwater discharge daily while non-stormwater discharges occur.

- Remove deposited solids in containment areas and capturing devices as needed and at the completion of the task. Dispose of any solids as described in WM-5, Solid Waste Management.
- Inspect containment areas and capturing devices and repair as needed.

References

Stormwater Quality Handbooks - Construction Site Best Management Practices (BMPs) Manual, State of California Department of Transportation (Caltrans), November 2000.

Typical Drawings : road drainage grading and decommissioning BMPs

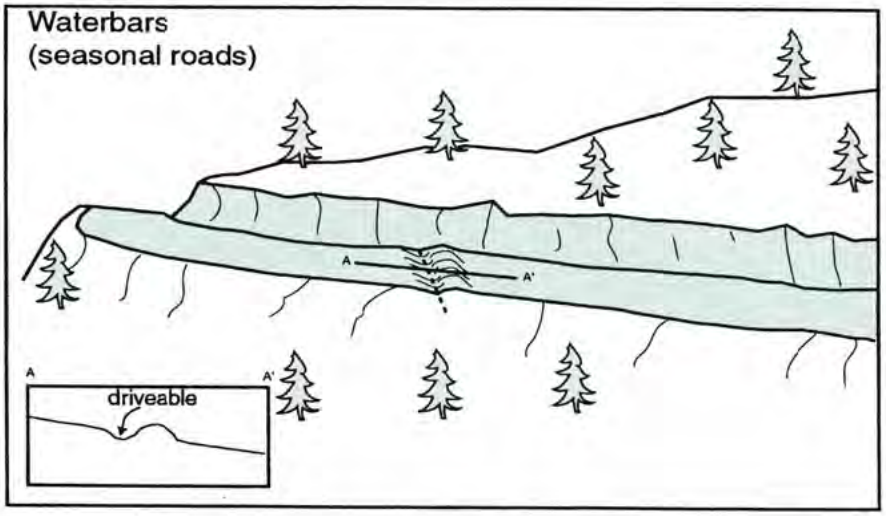

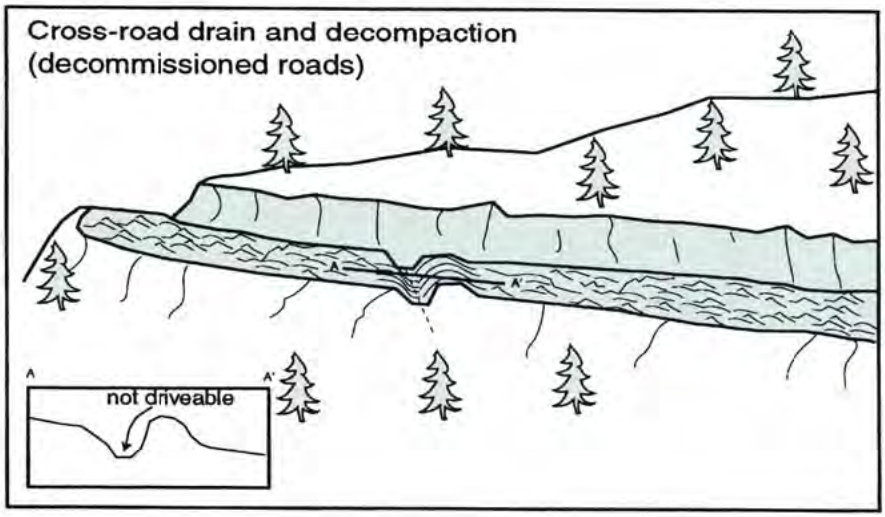

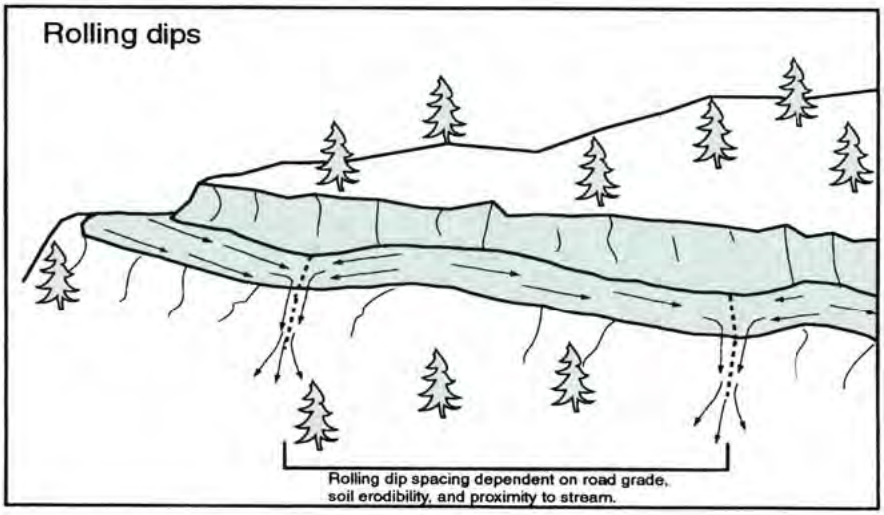

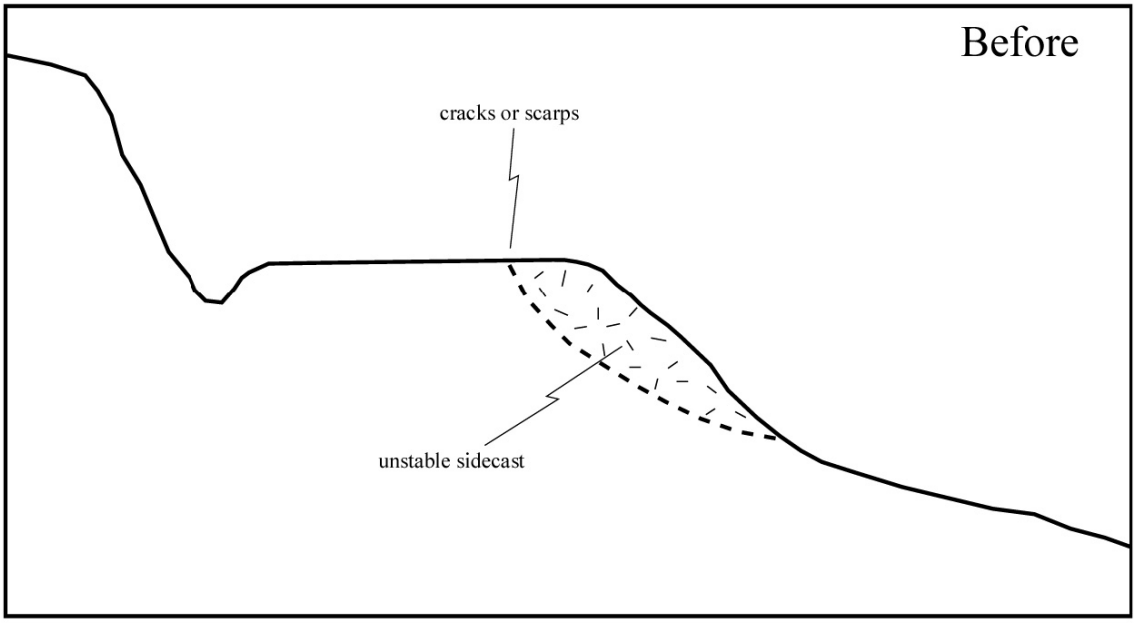

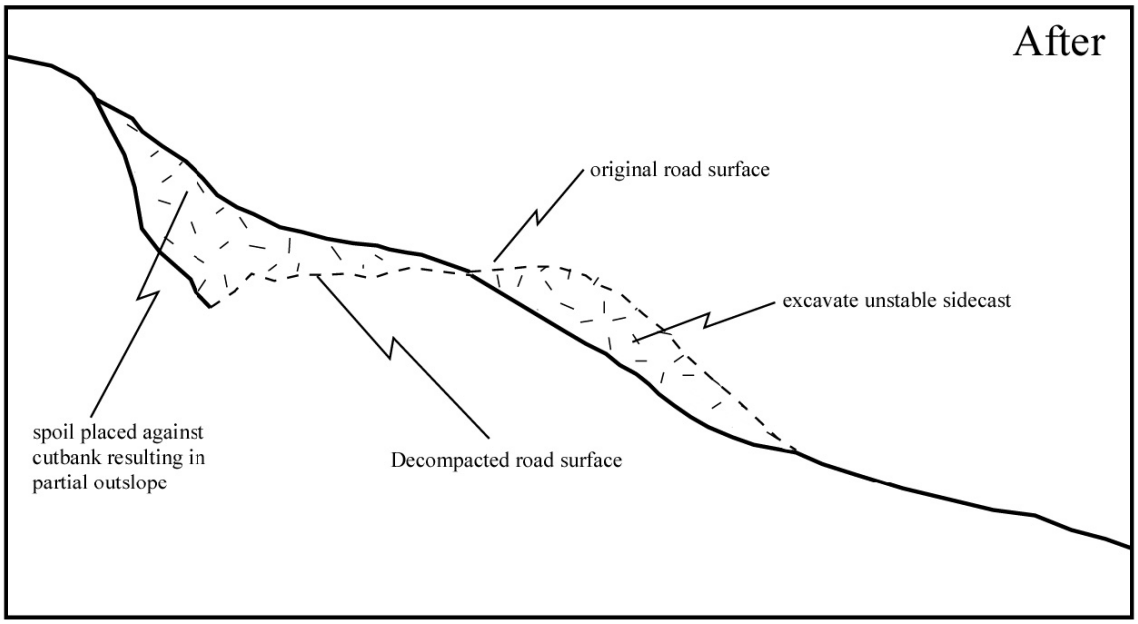

ONLY TO BE UTILIZED WHERE FILL SLOPE IS UNSTABLE

Condition

- Diversion potential
- Road surface and ditch flows drain to stream
- Undersized culvert high in fill with outlet erosion and elevated plugging potential

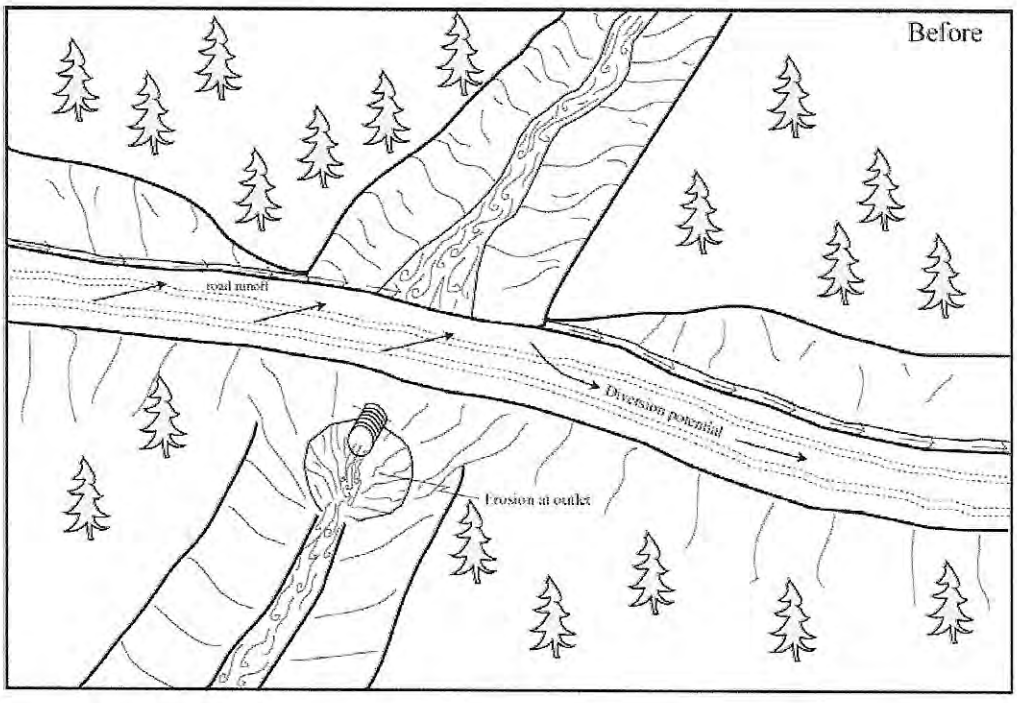

Treatment

- Road surface decompacted
- Cross road drains on old road
- Stream crossing fill completely excavated
- Excavated spoil used to outslope adjacent road

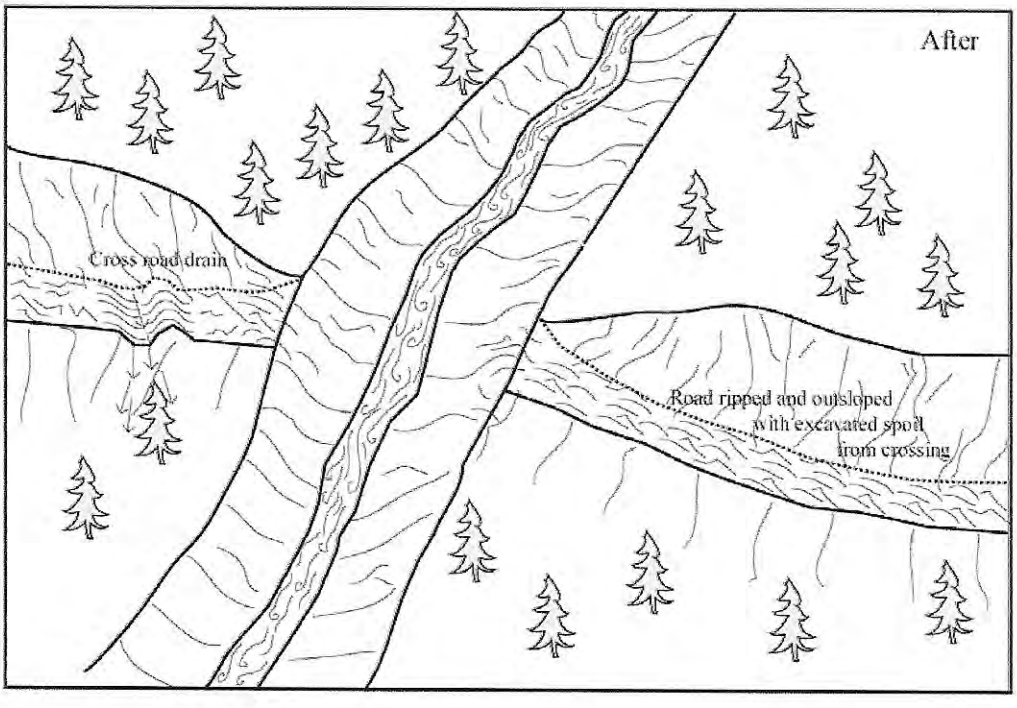

Figure X-12. Typical stream crossing excavation on a decommissioned road.

REFORMING STREAM CHANNEL

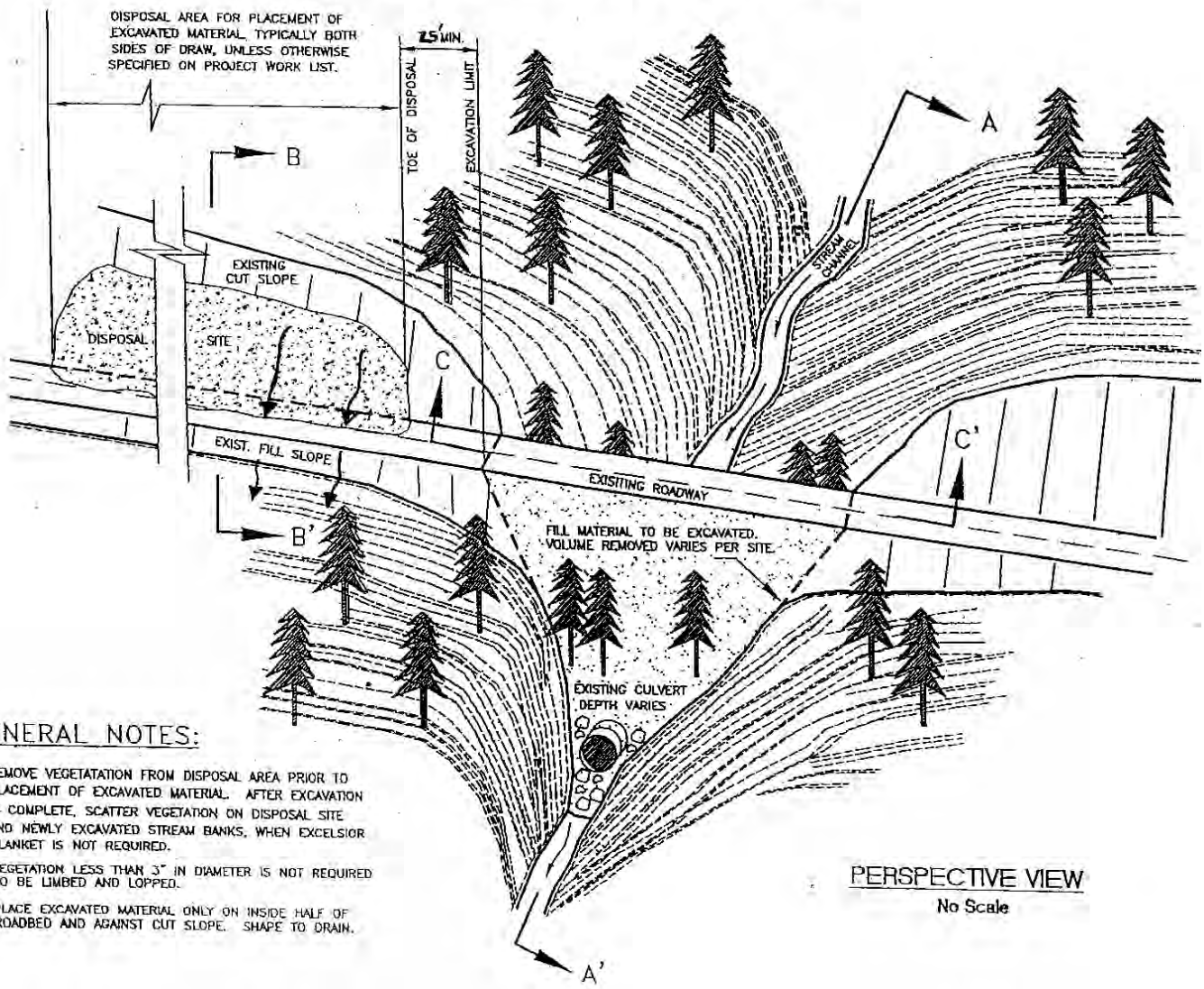

GENERAL NOTES:

1. REMOVE VEGETATATION FROM DISPOSAL AREA PRIOR TO PLACEMENT OF EXCAVATED MATERIAL. AFTER EXCAVATION IS COMPLETE, SCATTER VEGETATION ON DISPOSAL SITE AND NEWLY EXCAVATED STREAM BANKS, WHEN EXCELSIOR BLANKET IS NOT REQUIRED.
2. VEGETATION LESS THAN 3" IN DIAMETER IS NOT REQUIRED TO BE LIMBED AND LOPPED.
3. PLACE EXCAVATED MATERIAL ONLY ON INSIDE HALF OF ROADBED AND AGAINST CUT SLOPE. SHAPE TO DRAIN.

PERSPECTIVE VIEW

No Scale

Appendix C:

SWPPP Documents

Regulated Projects Worksheet 1 - Low Impact Development Stormwater Manual

DMA Name	Total Post Project Impervious Surface Area (square feet)	Self-Retaining Pervious Area[1] (square feet)	Ratio of Impervious Surface Area to Self-Retaining Pervious Surface Area	Does Ratio Achieve 3.5 : 1 ratio or better of Impervious Surface Area to Self-Retaining Pervious Surface Area (Yes or No)[2]
Example A	500	150	3.3 : 1	YES
Example B	500	100	5.0 : 1	NO

Regulated Projects Worksheet 2
City of Yreka - for use with Humboldt Low Impact Development Stormwater Manual

Project Information						Formulas
DMA Name:						
Total Post-Project Impervious Surface Area (square feet)			A		square feet	
24 hour - 85th Percentile Design Storm			B	0.78	inch	
Impervious Surface Runoff Value (Potential Stormwater Runoff due to impervious surface area and design storm value)			C	0	Gallons per 24 hours	C = A x B x 0.083 x 7.48
Pervious Self-Retaining Area (SRA) Credit (if applicable, if none enter 0)						
Self-Retaining Area (square feet)	100	SRA Credit		350	square feet	SRA Credit = Self-Retaining Area x 3.5
Site Design Measure Credits						
Tree Planting and Preservation						
New Trees		# of trees				
100 square feet per deciduous tree	D	1	E	200	square feet	E = D x 100
200 square feet per evergreen tree	F	2	G	400	square feet	G = E x 200
Existing Trees (Credit for 50% of existing canopy area)		Canopy diameter (feet)				
Tree #1	H_1	8	J_1	25	square feet	$J_1 = 3.14 \times (H_1/2)^2 \times 0.50$
Tree #2	H_2	8	J_2	25	square feet	$J_2 = 3.14 \times (H_2/2)^2 \times 0.50$
Tree #3	H_3	8	J_3	25	square feet	$J_3 = 3.14 \times (H_3/2)^2 \times 0.50$
Rain Barrel or Cisterns (55 gallon minimum)						
Square foot credit per gallon based on 24-hour, 85th Percentile Design Storm	K	2.5				
		Gallons				
Rain Barrels	L	110	M	275	square feet	M = L x K
Cisterns	N	10	P	25	square feet	P = N x K
Impervious Area Disconnection						
Credit per square foot of pervious receiving area			Q	1500	square feet	Q = Enter square foot value
Soil Quality Improvement						
Credit per square foot of soil quality improvement			R	500	square feet	R = Enter square foot value
Green Roof						
Credit per square foot of green roof installation			S	0	square feet	S = Enter square foot value
Porous Pavement						
Credit per square foot of porous pavement or pavers			T	0	square feet	T = Enter square foot value
Vegetated Swales						
Credit per square foot of vegetated swale			U	250	square feet	U = Enter square foot value
Credits Total			V	3575	square feet	V = SRA Credit + E + G + J_1 + J_2 + J_3 + M + P + Q + R + S + T + U
Post-Project Impervious Surface Area minus Site Design Measure Credits			W	-3575	square feet	W = A - V
NEW Impervious Surface Runoff Value (Potential Stormwater Runoff due to impervious surface area and design storm after implementation of Site Design Measures)			X	-1731	Gallons per 24 hours	X = W x B x 0.083 x 7.48
Percent reduction in Impervious Surface Runoff Value*			Y	#####	%	Y = ((C - X) / C) x %100

***If value for Y is not greater than or equal to %100 than bioretention is required for treating remaining runoff from impervious area indicated by value W. Design and implement bioretention facility in accordance with City of Yreka LID Stormwater Manual - Part 3.**

Green	Fill In [Enter Value]	Conversions Used:
Red	Calculated Value	1 inch = 0.083 feet
Black	Fixed Value	1 cubic foot = 7.48 gallons

Regulated Projects Worksheet 2 Version 1.0 - June 5, 2015

Regulated Projects Worksheet 2
City of Yreka - for use with Humboldt Low Impact Development Stormwater Manual

Project Information						Formulas
DMA Name:						
Total Post-Project Impervious Surface Area (square feet)			A		square feet	
24 hour - 85th Percentile Design Storm			B	0.78	inch	
Impervious Surface Runoff Value (Potential Stormwater Runoff due to impervious surface area and design storm value)			C	0	Gallons per 24 hours	C = A x B x 0.083 x 7.48
Pervious Self-Retaining Area (SRA) Credit (if applicable, if none enter 0)						
Self-Retaining Area (square feet)	100	SRA Credit		350	square feet	SRA Credit = Self-Retaining Area x 3.5
Site Design Measure Credits						
Tree Planting and Preservation						
New Trees		# of trees				
100 square feet per deciduous tree	D	1	E	200	square feet	E = D x 100
200 square feet per evergreen tree	F	2	G	400	square feet	G = E x 200
Existing Trees (Credit for 50% of existing canopy area)		Canopy diameter (feet)				
Tree #1	H_1	8	J_1	25	square feet	$J_1 = 3.14 \times (H_1/2)^2 \times 0.50$
Tree #2	H_2	8	J_2	25	square feet	$J_2 = 3.14 \times (H_2/2)^2 \times 0.50$
Tree #3	H_3	8	J_3	25	square feet	$J_3 = 3.14 \times (H_3/2)^2 \times 0.50$
Rain Barrel or Cisterns (55 gallon minimum)						
Square foot credit per gallon based on 24-hour, 85th Percentile Design Storm	K	2.5				
		Gallons				
Rain Barrels	L	110	M	275	square feet	M = L x K
Cisterns	N	10	P	25	square feet	P = N x K
Impervious Area Disconnection						
Credit per square foot of pervious receiving area			Q	1500	square feet	Q = Enter square foot value
Soil Quality Improvement						
Credit per square foot of soil quality improvement			R	500	square feet	R = Enter square foot value
Green Roof						
Credit per square foot of green roof installation			S	0	square feet	S = Enter square foot value
Porous Pavement						
Credit per square foot of porous pavement or pavers			T	0	square feet	T = Enter square foot value
Vegetated Swales						
Credit per square foot of vegetated swale			U	250	square feet	U = Enter square foot value
Credits Total			V	3575	square feet	V = SRA Credit + E + G + J_1 + J_2 + J_3 + M + P + Q + R + S + T + U
Post-Project Impervious Surface Area minus Site Design Measure Credits			W	-3575	square feet	W = A - V
NEW Impervious Surface Runoff Value (Potential Stormwater Runoff due to impervious surface area and design storm after implementation of Site Design Measures)			X	-1731	Gallons per 24 hours	X = W x B x 0.083 x 7.48
Percent reduction in Impervious Surface Runoff Value*			Y	#####	%	Y = ((C - X) / C) x %100

***If value for Y is not greater than or equal to %100 than bioretention is required for treating remaining runoff from impervious area indicated by value W. Design and implement bioretention facility in accordance with City of Yreka LID Stormwater Manual - Part 3.**

Green	Fill In [Enter Value]	Conversions Used:
Red	Calculated Value	1 inch = 0.083 feet
Black	Fixed Value	1 cubic foot = 7.48 gallons

Regulated Projects Worksheet 2 Version 1.0 - June 5, 2015

Regulated Projects Worksheet 2
City of Yreka - for use with Humboldt Low Impact Development Stormwater Manual

Project Information						Formulas
DMA Name:						
Total Post-Project Impervious Surface Area (square feet)			A		square feet	
24 hour - 85th Percentile Design Storm			B	0.78	inch	
Impervious Surface Runoff Value (Potential Stormwater Runoff due to impervious surface area and design storm value)			C	0	Gallons per 24 hours	C = A x B x 0.083 x 7.48
Pervious Self-Retaining Area (SRA) Credit (if applicable, if none enter 0)						
Self-Retaining Area (square feet)	100	SRA Credit		350	square feet	SRA Credit = Self-Retaining Area x 3.5
Site Design Measure Credits						
Tree Planting and Preservation						
New Trees		# of trees				
100 square feet per deciduous tree	D	1	E	200	square feet	E = D x 100
200 square feet per evergreen tree	F	2	G	400	square feet	G = E x 200
Existing Trees (Credit for 50% of existing canopy area)		Canopy diameter (feet)				
Tree #1	H_1	8	J_1	25	square feet	$J_1 = 3.14 \times (H_1/2)^2 \times 0.50$
Tree #2	H_2	8	J_2	25	square feet	$J_2 = 3.14 \times (H_2/2)^2 \times 0.50$
Tree #3	H_3	8	J_3	25	square feet	$J_3 = 3.14 \times (H_3/2)^2 \times 0.50$
Rain Barrel or Cisterns (55 gallon minimum)						
Square foot credit per gallon based on 24-hour, 85th Percentile Design Storm	K	2.5				
		Gallons				
Rain Barrels	L	110	M	275	square feet	M = L x K
Cisterns	N	10	P	25	square feet	P = N x K
Impervious Area Disconnection						
Credit per square foot of pervious receiving area			Q	1500	square feet	Q = Enter square foot value
Soil Quality Improvement						
Credit per square foot of soil quality improvement			R	500	square feet	R = Enter square foot value
Green Roof						
Credit per square foot of green roof installation			S	0	square feet	S = Enter square foot value
Porous Pavement						
Credit per square foot of porous pavement or pavers			T	0	square feet	T = Enter square foot value
Vegetated Swales						
Credit per square foot of vegetated swale			U	250	square feet	U = Enter square foot value
Credits Total			V	3575	square feet	V = SRA Credit + E + G + J_1 + J_2 + J_3 + M + P + Q + R + S + T + U
Post-Project Impervious Surface Area minus Site Design Measure Credits			W	-3575	square feet	W = A - V
NEW Impervious Surface Runoff Value (Potential Stormwater Runoff due to impervious surface area and design storm after implementation of Site Design Measures)			X	-1731	Gallons per 24 hours	X = W x B x 0.083 x 7.48
Percent reduction in Impervious Surface Runoff Value*			Y	#####	%	Y = ((C - X) / C) x %100

***If value for Y is not greater than or equal to %100 than bioretention is required for treating remaining runoff from impervious area indicated by value W. Design and implement bioretention facility in accordance with City of Yreka LID Stormwater Manual - Part 3.**

Green	Fill In [Enter Value]	Conversions Used:
Red	Calculated Value	1 inch = 0.083 feet
Black	Fixed Value	1 cubic foot = 7.48 gallons

Regulated Projects Worksheet 2 Version 1.0 - June 5, 2015

SWPPP BMP Inspection Form for Risk Level 1 and 2 Projects

I. SITE INFORMATION

Site Name:	QSP Name:	
WDID #:	QSP Signature:	
Inspection Date:	IOR	
Inspection Time:		

II. INSPECTION INFORMATION

Reason for Inspection: ☐Routine Weekly ☐ Pre-Storm ☐ Post-Storm ☐ During Storm

III. WEATHER INFORMATION

Weather Information		
Time since last storm (days/hours)		
Ending date or time of last storm event.		
Storm Duration:		(Duration of most recent storm event or present storm event,)
Accumulated Rainfall (inch)		(Current accumulation for "During" or Storm total for "Post" and Most Recent Storm.)
Pre-Storm Only		
NWS Precipitation probability (%)		
NWS QPF total/temporal duration		

III. INITIAL OBSERVATIONS

Discharge Point Locations	

Current Project Size	Total Project Area		Acre
	Disturbed Area		Acre / SF
	Approximate Inactive Disturbed Area		Acre / SF

IV.SWPPP Documentation

SWPPP Documentation	Adequate		Notes/Corrective Actions Required
Visual Inspection/Monitoring Records	☐ Yes	☐ No	
Weather Information	☐ Yes	☐ No	
WPCD w/BMP	☐ Yes	☐ No	
Amendment Log/Required	☐ Yes	☐ No	
Significant Spills/Leaks Log	☐ Yes	☐ No	
Current/Relevant Construction Schedule	☐ Yes	☐ No	
Sampling and Analysis Plan/CSMP	☐ Yes	☐ No	
QSP Training Records	☐ Yes	☐ No	
Employee Training Records	☐ Yes	☐ No	
Current Subcontractor list/ Notification	☐ Yes	☐ No	
Current Pollutant Inventory	☐ Yes	☐ No	
Rain Event Action Plan (Risk Level 2)	☐ Yes	☐ No	

V. OBSERVATIONS

Discharge observed from site: ☐ Yes ☐ No Description:

Location(s):	

*****If Discharges are observed, the <u>DISCHARGE FORM</u> must be completed and attached to this Inspection Form.*****

VI. BMP ASSESSMENT *(Italics indicate specific CGP minimum BMPs)*

BMP	Adequate			Notes	Requires Corrective Action (X)
	Yes	No	NA		
Soil Stabilization and Erosion Prevention					
Preservation of existing vegetation					
Cover: Hydraulic Mulch, Hydroseeding, Soil Binders, Straw Mulch, Wood Mulch; Rock/Gravel					
Cover: Geotextiles, plastic covers, erosion prevention blankets					
Outlet Protection/ Velocity Dissipation Device					
Slope Drains					
Site Drainage: earth dikes, drainage swales, ditches					
Containment					
Other BMPs; Innovative BMPs;					
Cover for Inactive areas?					
Runoff and Do all active areas have runoff control and soil stabilization (Risk Level 2)?					
Sediment Control/Containment					
Perimeter Protection					
Storm Drain Inlet Protection					
Street Sweeping/ Vacuuming					
Tracking Controls (daily for Risk level 2)					
Linear sediment controls (Risk Level 2) Appropriate spacing/locations?					
Materials, Waste, and Equipment					
Material Storage with BMPs					
Are all fluid and semi-fluid chemicals stored within secondary containment are otherwise completely contained?					
Stockpile Management BMPs					
Are inactive stockpiles covered and bermed?					

BMP	Adequate			Notes	Requires Corrective Action (X)
	Yes	No	NA		
Equipment Storage with BMPs					
Sanitary/Septic Waste Management and Location					
Concrete Waste Management					
Hazardous Waste Management					
Liquid Waste Management					
Spill Prevention and Control					
Waste Removal Schedule					
Dumpsters covered at end of day?					
Non-Storm Water Management					
Water Conservation Practices					
Potable Water/Irrigation					
Illegal Connections and Illicit Discharges					
Dewatering Operations					
Are any rinse or wash waters observed on the ground?					
Vehicle and Equipment Cleaning					
Vehicle and Equipment Fueling					
Vehicle and Equipment Maintenance					
Concrete Curing and Finishing					
Landscape Materials					
Are landscape materials contained?					
Have landscape materials been applied prior to a forecasted storm?					
Discharge Locations					
Are the discharge locations free of significant erosion or sediment transport?					
Is the site free of observed discharges?					
If discharges or offsite runoff is observed, complete the Discharge form					
Wind Erosion					
Wind Erosion Control					
Are stockpiles protected from wind erosion?					
Other/Site Specific/new CGP Specific					
Are there any other potential stormwater pollution issues or concerns? If yes, explain below:					

VII. Corrective Actions Tracking (Include new and actions from prior inspections not yet resolved)

New/ Prior	Description of Corrective action	Date Complete	Reason for delay

VIII. Other Notes

See below

Photos Attached: ☐ Refer to documented photos: ☐

Risk Level 1& 2 ***Quarterly Non Stormwater Discharge Observation Sheet***	
Date and Time of Inspection:	Report Date: Quarter/Year:
Inspection Type:	☒ Quarterly non-stormwater

Site Information	
Construction Site Name:	WDID #:
Construction stage and completed activities:	Approximate area of exposed site:

Weather and Observations		
Estimate time since last storm: _____(days or hours) Rain gauge reading:_____ (inches) Observations: If yes identify location Are discharges observed: Yes ☐ No ☐ Are discharges Authorized/Unauthorized: Authorized ☐ Unauthorized ☐ No discharge ☐		
Odors	Yes ☐	No ☐
Floating material	Yes ☐	No ☐
Suspended Material	Yes ☐	No ☐
Sheen	Yes ☐	No ☐
Discolorations	Yes ☐	No ☐
Turbidity	Yes ☐	No ☐
Comments: .		

Site Inspections	
Outfalls or BMPs Evaluated	**Deficiencies Noted**
(add additional sheets or attached detailed BMP Inspection Checklists)	
See attached BMP Considerations form	

Photos Taken:	Yes ☐	No ☐	Photo Reference IDs:

Corrective Actions Identified (note if SWPPP/REAP/Amendment change is needed)

Inspector Information	
Inspector Name:	Inspector Title:
Signature:	Date:

Minimum new CGP BMP designated questions used in conjunction with: 1) Quarterly Non Stormwater Discharge Observation Sheet; 2) the site's BMP inspection form; and 3) a copy of a site map indicating drainage areas and discharge points.		
Category	Answer	Explanation
Construction Materials		
Is there an appropriate inventory of materials and products?	Yes / No / NA	
Provide example of process of how materials and products are inventoried.		
Are all stockpiled materials covered and bermed?	Yes / No / NA	
Are chemicals stored in water tight containers?	Yes / No / NA	
If yes, are containers within appropriate secondary containment or within enclosed storage shed?	Yes / No / NA	
Waste Management		
Is there evidence of any rinse water or wash water spilled on surfaces?	Yes / No / NA	
Are rinse and wash waters prevented from disposal to pervious surfaces/impervious surfaces/ stormwater collection system?	Yes / No / NA	
Are sanitary facilities contained to prevent discharge to drain inlets or offsite?	Yes / No / NA	
Are sanitary facilities regularly inspected for spills and leaks? How often: __*Explanation*_.	Yes / No / NA	
Are waste containers/dumpsters covered at end of each day and during rain?	Yes / No / NA	
Are waste container BMPs implemented to prevent contaminated discharges?	Yes / No / NA	
Are waste materials contained or protected from wind and rain?	Yes / No / NA	
Are procedures implemented to respond to hazardous and non-hazardous spills?	Yes / No / NA	
Does SWPPP contain spill response element?	Yes / No / NA	
Are spill kits available on site at	Yes / No / NA	

Minimum new CGP BMP designated questions used in conjunction with: 1) Quarterly Non Stormwater Discharge Observation Sheet; 2) the site's BMP inspection form; and 3) a copy of a site map indicating drainage areas and discharge points.		
Category	Answer	Explanation
convenient locations?		
Where are spill kits located? *Explanation?*		
Are workers trained with documented training for spill response?	Yes / No / NA	
Provide example of how workers are trained in use of spill kits.		
Vehicle storage and Maintenance		
Are equipment oil, grease, fuel, and other fluids prevented from spills and leaks?	Yes / No / NA	
Are all equipment and vehicles stored in designated areas fitted with appropriate BMPs?	Yes / No / NA	
Are equipment/vehicle leaks and spills cleaned up immediately and disposed of appropriately?	Yes / No / NA	
Landscape Materials		
Are mulch and top soil stockpiles contained?	Yes / No / NA	
Are fertilizers and amendments contained?	Yes / No / NA	
Have erodible landscape materials been applied within 2 days of forecasted rain? (since last inspection)	Yes / No / NA	
Are erodible materials applied at specified quantities and rates and by experienced and knowledgeable workers?	Yes / No / NA	
Are erodible materials elevated and covered and appropriately stored when not being used?	Yes / No / NA	
Potential Pollutant Source		
Have the quantity and locations of potential pollutant sources been considered? …*Explanation*	Yes / No / NA	
Has exposure of materials been considered for preventing contact with stormwater?	Yes / No / NA	
Have pathways been considered to	Yes / No / NA	

Minimum new CGP BMP designated questions used in conjunction with: 1) Quarterly Non Stormwater Discharge Observation Sheet; 2) the site's BMP inspection form; and 3) a copy of a site map indicating drainage areas and discharge points.		
Category	Answer	Explanation
prevent pollutant exposure to stormwater and non-stormwater discharges (authorized and potentially unauthorized)? ….*Explanation*		
Have previous spills been accessed to prevent pollutant exposure?	Yes / No / NA	
Have non-stormwater discharges and runon been assessed to prevent pollutant exposure?	Yes / No / NA	
Are sampling records up-to-date?	Yes / No / NA	
Are sample bottles and sampling kit present and available?	Yes / No / NA	
Are onsite individuals trained for collecting samples?	Yes / No / NA	
Has a lab been designated for analysis of samples?	Yes / No / NA	
Are observation/inspection records up-to-date?	Yes / No / NA	
Are all BMPs designated to prevent pollutant exposure effective?	Yes / No / NA	
Are BMPs effective in preventing air deposition of pollutants?	Yes / No / NA	
Non-stormwater		
Have non-stormwater discharges occurred – since last quarterly inspection?	Yes / No / NA	
Are implemented measures effective to prevent non-stormwater discharges?	Yes / No / NA	
Are vehicles washed on site?	Yes / No / NA	
If yes, are vehicles washed to prevent discharge to DIs or offsite?	Yes / No / NA	
Are streets cleaned at frequency to prevent discharge to MS4, drain inlets, or receiving waters?	Yes / No / NA	
Erosion Control		
Are wind erosion BMPs effective?	Yes / No / NA	
Has soil cover been implemented for inactive areas, finished slopes, open spaces, utility backfill, completed lots/sections?	Yes / No / NA	

Minimum new CGP BMP designated questions used in conjunction with: 1) Quarterly Non Stormwater Discharge Observation Sheet; 2) the site's BMP inspection form; and 3) a copy of a site map indicating drainage areas and discharge points.		
Category	Answer	Explanation
Is plastic used as a soil cover?	Yes / No / NA	
Have plastic use alternatives been considered? Explanation	Yes / No / NA	
Sediment Control		
Are perimeter controls effectively maintained?	Yes / No / NA	
Are tracking controls effectively maintained?	Yes / No / NA	
Are sediment basins used on site?	Yes / No / NA	
If yes, Are sediment basins designed under CASQA standards?	Yes / No / NA	

Date: _____20_____ WDID Number: [ ]

APPENDIX 3: REAP TEMPLATES

Rain Event Action Plan (REAP)
Grading and Land Development Phase

Preparation of land for utility installation and vertical building including clearing and grubbing, demolition, blasting or rock crushing, if necessary, and soil excavation and mass grading. This form is to be reviewed and completed by the qualified SWPPP practitioner within 48 hours prior to a rain event during the Grading and Land Development Phase.

Site Information:

_____

Site Name, City and Zip Code □ Risk Level 2 □ Risk Level 3

Site Storm Water Manager Information:

_____

Name, Company and Emergency Phone Number (24/7)

Erosion and Sediment Control Provider – Labor Force Contracted for the Site:

_____

Name, Company and Emergency Phone Number (24/7)

Storm Water Sampling Agent Information:

_____

Name, Company and Emergency Phone Number (24/7)

Activities Associated with Land Surface Development

Check ALL the boxes below that apply to your site.

- ❑ Demolition
- ❑ Rough Grade
- ❑ Soil Amendment(s):
- ❑ Rock Crushing
- ❑ Equip. Maintenance/Fueling
- ❑ Vegetation Removal
- ❑ Finish Grade
- ❑ Over Excavation (_____ ft)
- ❑ Erosion and Sediment Control
- ❑ Material Delivery and Storage
- ❑ Vegetation Salvage-Harvest
- ❑ Blasting
- ❑ Soils Testing
- ❑ Surveying
- ❑ Other:

Trades Active on Site During Land Surface Development

Check ALL the boxes below that apply to your site.

- ❑ Demolition
- ❑ Storm Drain Improvement
- ❑ Street Improvements
- ❑ Material Delivery
- ❑ Other:
- ❑ Grading Contractor
- ❑ Water, Sewer, Electric Utilities
- ❑ Rock Products
- ❑ Equipment Fueling/Maintenance
- ❑ Other:
- ❑ Erosion and Sediment Control
- ❑ Surveyor – Soils Technician
- ❑ Sanitary Station Provider
- ❑ Laborers
- ❑ Other:

Trade Contractor Information Provided

- ❑ Educational Material Handout
- ❑ Contractual Language
- ❑ Other:
- ❑ Tailgate Meetings
- ❑ Fines and Penalties
- ❑ Other:
- ❑ Training Workshop
- ❑ Signage
- ❑ Other:

Rain Event Action Plan (REAP)
Grading and Land Development Phase

Predicted Rain Event Triggered Actions

Below is a list of suggested actions for this project phase. Each active Trade should check all material storage areas, stockpiles, waste management areas, vehicle and equipment storage and maintenance, areas of active soil disturbance, and areas of active work to ensure the proper implementation of BMPs. Project-wide BMPs should be checked and cross-referenced to the BMP progress map.

Trade or Activity	Suggested action(s) to review before rain event
❑ Information & Scheduling	❑ Inform trade supervisors of predicted rain ❑ Check scheduled activities and rescheduled as needed ❑ Alert erosion/sediment control provider ❑ Alert sample collection contractor (if applicable) ❑ Schedule staff for extended rain inspections (including weekends & holidays) ❑ Check Erosion and Sediment Control (ESC) material stock ❑ Review BMP map ❑ Other:_____ ❑ _____ ❑ _____
❑ Material storage areas	❑ Material under cover or in sheds (ex: treated woods and metals) ❑ Perimeter control around stockpiles ❑ Other:_____ ❑ _____ ❑ _____
❑ Waste management areas	❑ Dumpsters closed ❑ Drain holes plugged ❑ Recycling bins covered ❑ Sanitary stations bermed and protected from tipping ❑ Other:_____ ❑ _____ ❑ _____
❑ Trade operations	❑ Exterior operations shut down for event (ex: no concrete pours or paving) ❑ Do not apply soil treatments (ex: fertilizer) within 24 hours of event ❑ Materials and equipment (ex: tools) properly stored and covered ❑ Waste and debris disposed in covered dumpsters or removed from site ❑ Trenches and excavations protected ❑ Perimeter controls around disturbed areas ❑ Cover and berm fueling and repair areas ❑ Other:_____ ❑ _____ ❑ _____
❑ Site ESC BMPs	❑ Adequate capacity in sediment basins and traps ❑ Site perimeter controls in place ❑ Catch basin and drop inlet protection in place ❑ Deploy temporary erosion control on inactive areas ❑ Deploy temporary perimeter control around disturbed areas or stockpiles ❑ Sweep roads; stabilize site ingress and egress points ❑ Other:_____ ❑ _____ ❑ _____
❑ Concrete rinse out area	❑ Adequate capacity for rain ❑ Cover wash-out bins ❑ Other:_____ ❑ _____ ❑ _____

❑ Spill and drips	❑ Clean up all incident spills and drips, including paint, stucco, fuel, and oil ❑ Empty drip pans ❑ Other:_____ ❑ _____ ❑ _____

❑ Other / Discussion / Diagrams	❑ _____ ❑ _____ ❑ _____ ❑ _____ ❑ _____ ❑ _____ ❑ _____ ❑ _____ ❑ _____ ❑ _____ ❑ _____ ❑ _____ ❑ _____

I certify under penalty of law that this Rain Event Action Plan (REAP) will be performed in accordance with the General Permit by me or under my direction or supervision in accordance with a system designed to assure that qualified personnel properly gathered and evaluated the information submitted. Based on my inquiry of the persons who manage the system, or those persons directly responsible for gathering the information, the information submitted is, to the best of my knowledge and belief, true, accurate, and complete. I am aware that there are significant penalties for submitting false information, including the possibility of fine and imprisonment for knowing violations.

_____ Date: _____

Site Storm Water Manager Signature (Use ink please)

Date: _____20_____ WDID Number: [ ]

Rain Event Action Plan (REAP)
Streets and Utilities Phase

Finish grading activities and installation of electrical, gas, water, sewer, stormwater control, and communication systems; Installation of roadways, curbs, gutters and other site design features for stormwater control. This form to be reviewed and completed by the qualified SWPPP practitioner within 48 hours prior to a rain event during the Streets and Utilities Phase.

Site Information:

_____

Site Name, City and Zip Code □ Risk Level 2 □ Risk Level 3

Site Storm Water Manager Information:

_____

Name, Company and Emergency Phone Number (24/7)

Erosion and Sediment Control Provider – Labor Force Contracted for the Site:

_____

Name, Company and Emergency Phone Number (24/7)

Storm Water Sampling Agent Information:

_____

Name, Company and Emergency Phone Number (24/7)

Activities Associated with Streets and Utilities Development

Check ALL the boxes below that apply to your site.

- ❑ Rough Grade
- ❑ Finish Grade
- ❑ Soil Amendment(s):
- ❑ Equip. Maintenance/Fueling
- ❑ Utility Install: water-sewer-gas
- ❑ Storm Drain Installation
- ❑ Masonry
- ❑ Curb and Gutter/Concrete Pour
- ❑ Paving Operations
- ❑ Material Delivery & Storage
- ❑ Erosion and Sediment Control
- ❑ Other:

Trades Active on Site During Streets and Utilities Development

Check ALL the boxes below that apply to your site.

- ❑ Storm Drain Improvement
- ❑ Street Improvements
- ❑ Material Delivery
- ❑ Trenching
- ❑ Concrete Pouring
- ❑ Foundation
- ❑ Other:
- ❑ Other:
- ❑ Grading Contractor
- ❑ Water Pipe Installation
- ❑ Sewer Pipe Installation
- ❑ Gas Pipe Installation
- ❑ Electrical Installation
- ❑ Communication Installation
- ❑ Erosion and Sediment Control
- ❑ Other:
- ❑ Surveyor- Soil Technician
- ❑ Sanitary Station Provider
- ❑ Laborers
- ❑ Electrical
- ❑ Carpentry
- ❑ Plumbing
- ❑ Masonry
- ❑ Other:

Trade Contractor Information Provided

- ❑ Educational Material Handout
- ❑ Contractual Language
- ❑ Other:
- ❑ Tailgate Meetings
- ❑ Fines and Penalties
- ❑ Other:
- ❑ Training Workshop
- ❑ Signage
- ❑ Other:

Rain Event Action Plan (REAP)
Streets and Utilities Phase

Predicted Rain Event Triggered Actions

Below is a list of suggested actions for this project phase. Each active Trade should check all material storage areas, stockpiles, waste management areas, vehicle and equipment storage and maintenance, areas of active soil disturbance, and areas of active work to ensure the proper implementation of BMPs. Project-wide BMPs should be checked and cross-referenced to the BMP progress map.

Trade or Activity	Suggested action(s) to review before rain event
❑ Information & Scheduling	❑ Inform trade supervisors of predicted rain ❑ Check scheduled activities and rescheduled as needed ❑ Alert erosion/sediment control provider ❑ Alert sample collection contractor (if applicable) ❑ Schedule staff for extended rain inspections (including weekends & holidays) ❑ Check Erosion and Sediment Control (ESC) material stock ❑ Review BMP map ❑ Other:_____ ❑ _____ ❑ _____
❑ Material storage areas	❑ Material under cover or in sheds (ex: treated woods and metals) ❑ Perimeter control around stockpiles ❑ Other:_____ ❑ _____ ❑ _____
❑ Waste management areas	❑ Dumpsters closed ❑ Drain holes plugged ❑ Recycling bins covered ❑ Sanitary stations bermed and protected from tipping ❑ Other:_____ ❑ _____ ❑ _____
❑ Trade operations	❑ Exterior operations shut down for event (ex: no concrete pours or paving) ❑ Do not apply soil treatments (ex: fertilizer) within 24 hours of event ❑ Materials and equipment (ex: tools) properly stored and covered ❑ Waste and debris disposed in covered dumpsters or removed from site ❑ Trenches and excavations protected ❑ Perimeter controls around disturbed areas ❑ Cover and berm fueling and repair areas ❑ Other:_____ ❑ _____ ❑ _____
❑ Site ESC BMPs	❑ Adequate capacity in sediment basins and traps ❑ Site perimeter controls in place ❑ Catch basin and drop inlet protection in place ❑ Deploy temporary erosion control on inactive areas ❑ Deploy temporary perimeter control around disturbed areas or stockpiles ❑ Sweep roads; stabilize site ingress and egress points ❑ Other:_____ ❑ _____ ❑ _____
❑ Concrete rinse out area	❑ Adequate capacity for rain ❑ Cover wash-out bins ❑ Other:_____ ❑ _____ ❑ _____

❑ Spill and drips	❑ Clean up all incident spills and drips, including paint, stucco, fuel, and oil ❑ Empty drip pans ❑ Other:_____ ❑ _____ ❑ _____

❑ Other / Discussion / Diagrams	❑ _____ ❑ _____ ❑ _____ ❑ _____ ❑ _____ ❑ _____ ❑ _____ ❑ _____ ❑ _____ ❑ _____ ❑ _____ ❑ _____ ❑ _____

I certify under penalty of law that this Rain Event Action Plan (REAP) will be performed in accordance with the General Permit by me or under my direction or supervision in accordance with a system designed to assure that qualified personnel properly gathered and evaluated the information submitted. Based on my inquiry of the persons who manage the system, or those persons directly responsible for gathering the information, the information submitted is, to the best of my knowledge and belief, true, accurate, and complete. I am aware that there are significant penalties for submitting false information, including the possibility of fine and imprisonment for knowing violations.

_____ Date: _____

Site Storm Water Manager Signature (Use ink please)

Date: _____20_____ WDID Number: [ ]

Rain Event Action Plan (REAP)
Vertical Construction Phase

Build out of structures from foundations to roofing, including rough landscaping. This form to be reviewed and completed by the qualified SWPPP practitioner within 48 hours prior to a rain event during the Vertical Construction Phase.

Site Information:

_____

Site Name, City and Zip Code ☐ Risk Level 2 ☐ Risk Level 3

Site Storm Water Manager Information:

_____

Name, Company and Emergency Phone Number (24/7)

Erosion and Sediment Control Provider – Labor Force Contracted for the Site:

_____

Name, Company and Emergency Phone Number (24/7)

Storm Water Sampling Agent Information:

_____

Name, Company and Emergency Phone Number (24/7)

Activities Associated with Vertical Construction

Check ALL the boxes below that apply to your site, and others that are active at your site.

- ❑ Framing
- ❑ Masonry
- ❑ Drywall/Interior Walls
- ❑ Equip. Maintenance/Fueling
- ❑ Exterior Siding
- ❑ Flooring
- ❑ Roofing
- ❑ Carpentry
- ❑ Electrical
- ❑ Plumbing
- ❑ HVAC
- ❑ Insulation
- ❑ Material Delivery & Storage
- ❑ Soil Amendment(s):
- ❑ Concrete/Forms/Foundation
- ❑ Painting
- ❑ Stucco
- ❑ Tile
- ❑ Landscaping & Irrigation
- ❑ Equip. Repair and Fueling
- ❑ Other:

Trades Active on Site During Vertical Construction

Check ALL the boxes below that apply to your site, and others that are active at your site.

- ❑ Grading Contractor
- ❑ Tile Work- Flooring
- ❑ Drywall
- ❑ Electricians
- ❑ HVAC installers
- ❑ Exterior Siding
- ❑ Insulation
- ❑ Fireproofing
- ❑ Steel Systems
- ❑ Utilities, e.g., Sewer, Electric
- ❑ Foundation
- ❑ Roofers
- ❑ Stucco
- ❑ Masons
- ❑ Landscapers
- ❑ Riggers
- ❑ Utility Line Testers
- ❑ Others:
- ❑ Erosion/ Sediment Control
- ❑ Surveyors
- ❑ Sanitary Station Provider
- ❑ Laborers
- ❑ Painters
- ❑ Carpenters
- ❑ Plumbers
- ❑ Pest Control: termite prevent.
- ❑ Other:

Trades that are storing materials and/or waste outside or conducting activities outside should be listed.

Trade Contractor Information Provided

- ❑ Educational Material Handout
- ❑ Contractual Language
- ❑ Other:
- ❑ Tailgate Meetings
- ❑ Fines and Penalties
- ❑ Other:
- ❑ Training Workshop
- ❑ Signage
- ❑ Other:

Rain Event Action Plan (REAP)
Vertical Construction Phase

Predicted Rain Event Triggered Actions

Below is a list of suggested actions for this project phase. Each active Trade should check all material storage areas, stockpiles, waste management areas, vehicle and equipment storage and maintenance, areas of active soil disturbance, and areas of active work to ensure the proper implementation of BMPs. Project-wide BMPs should be checked and cross-referenced to the BMP progress map.

Trade or Activity	Suggested action(s) to review before rain event
❑ Information & Scheduling	❑ Inform trade supervisors of predicted rain ❑ Check scheduled activities and rescheduled as needed ❑ Alert erosion/sediment control provider ❑ Alert sample collection contractor (if applicable) ❑ Schedule staff for extended rain inspections (including weekends & holidays) ❑ Check Erosion and Sediment Control (ESC) material stock ❑ Review BMP map ❑ Other:_____ ❑ _____ ❑ _____
❑ Material storage areas	❑ Material under cover or in sheds (ex: treated woods and metals) ❑ Perimeter control around stockpiles ❑ Other:_____ ❑ _____ ❑ _____
❑ Waste management areas	❑ Dumpsters closed ❑ Drain holes plugged ❑ Recycling bins covered ❑ Sanitary stations bermed and protected from tipping ❑ Other:_____ ❑ _____ ❑ _____
❑ Trade operations	❑ Exterior operations shut down for event (ex: no concrete pours or paving) ❑ Do not apply soil treatments (ex: fertilizer) within 24 hours of event ❑ Materials and equipment (ex: tools) properly stored and covered ❑ Waste and debris disposed in covered dumpsters or removed from site ❑ Trenches and excavations protected ❑ Perimeter controls around disturbed areas ❑ Cover and berm fueling and repair areas ❑ Other:_____ ❑ _____ ❑ _____
❑ Site ESC BMPs	❑ Adequate capacity in sediment basins and traps ❑ Site perimeter controls in place ❑ Catch basin and drop inlet protection in place ❑ Deploy temporary erosion control on inactive areas ❑ Deploy temporary perimeter control around disturbed areas or stockpiles ❑ Sweep roads; stabilize site ingress and egress points ❑ Other:_____ ❑ _____ ❑ _____
❑ Concrete rinse out area	❑ Adequate capacity for rain ❑ Cover wash-out bins ❑ Other:_____ ❑ _____ ❑ _____

❑ Spill and drips	❑ Clean up all incident spills and drips, including paint, stucco, fuel, and oil ❑ Empty drip pans ❑ Other:_____ ❑ _____ ❑ _____

❑ Other / Discussion / Diagrams	❑ _____ ❑ _____ ❑ _____ ❑ _____ ❑ _____ ❑ _____ ❑ _____ ❑ _____ ❑ _____ ❑ _____ ❑ _____ ❑ _____ ❑ _____

I certify under penalty of law that this Rain Event Action Plan (REAP) will be performed in accordance with the General Permit by me or under my direction or supervision in accordance with a system designed to assure that qualified personnel properly gathered and evaluated the information submitted. Based on my inquiry of the persons who manage the system, or those persons directly responsible for gathering the information, the information submitted is, to the best of my knowledge and belief, true, accurate, and complete. I am aware that there are significant penalties for submitting false information, including the possibility of fine and imprisonment for knowing violations.

_____ Date: _____

Site Storm Water Manager Signature (Use ink please)

Date: _____20_____ WDID Number: [ ]

Rain Event Action Plan (REAP)
Post – Construction Phase

Final landscaping and site stabilization, material removal, and post construction obligation installation such as storm drain inlet stenciling. This form to be reviewed and completed by the qualified SWPPP practitioner within 48 hours prior to a rain event during the Post-Construction Phase.

Site Information:

_____

Site Name, City and Zip Code □ Risk Level 2 □ Risk Level 3

Site Storm Water Manager Information:

_____

Name, Company and Emergency Phone Number (24/7)

Erosion and Sediment Control Provider – Labor Force Contracted for the Site:

_____

Name, Company and Emergency Phone Number (24/7)

Storm Water Sampling Agent Information:

_____

Name, Company and Emergency Phone Number (24/7)

Activities Associated with Site Post Construction

Check ALL the boxes below that apply to your site.

- ❑ Stabilization
- ❑ Vegetation Establishment
- ❑ E&S Control BMP Removal
- ❑ Finish Grade
- ❑ Storage Yard/ Material Removal
- ❑ Landscape Installation
- ❑ Painting and Touch-Up
- ❑ Irrigation System Testing
- ❑ Other:

Installation of Post-Construction BMPs:

- ❑ Drainage Inlet Stencils
- ❑ Inlet Filtration
- ❑ Perm. Water Quality Ponds
- ❑ Other:
- ❑ Other:
- ❑ Other:

Trades Active on During Site Post Construction

Check ALL the boxes below that apply to your site.

- ❑ Material Delivery
- ❑ Landscape Installation
- ❑ Erosion and Sediment Control
- ❑ Irrigation System Installation
- ❑ BMP Installation
- ❑ Sanitary Station Provider
- ❑ Pool Installation
- ❑ Water Feature Installation
- ❑ Laborers
- ❑ Painting
- ❑ Equipment Fueling
- ❑ Other:

Home Owner and HOA Information Provided

- ❑ Educational Material Handout
- ❑ Door Hangers
- ❑ Educational Workshop
- ❑ Educational Material Mailings
- ❑ Fines and Penalties
- ❑ Signage
- ❑ Community Postings
- ❑ Other:
- ❑ Other:

Rain Event Action Plan (REAP)
Post – Construction Phase

Predicted Rain Event Triggered Actions

Below is a list of suggested actions for this project phase. Each active Trade should check all material storage areas, stockpiles, waste management areas, vehicle and equipment storage and maintenance, areas of active soil disturbance, and areas of active work to ensure the proper implementation of BMPs. Project-wide BMPs should be checked and cross-referenced to the BMP progress map.

Trade or Activity	Suggested action(s) to review before rain event
❑ Information & Scheduling	❑ Inform trade supervisors of predicted rain ❑ Check scheduled activities and rescheduled as needed ❑ Alert erosion/sediment control provider ❑ Alert sample collection contractor (if applicable) ❑ Schedule staff for extended rain inspections (including weekends & holidays) ❑ Check Erosion and Sediment Control (ESC) material stock ❑ Review BMP map ❑ Other:_____ ❑ _____ ❑ _____
❑ Material storage areas	❑ Material under cover or in sheds (ex: treated woods and metals) ❑ Perimeter control around stockpiles ❑ Other:_____ ❑ _____ ❑ _____
❑ Waste management areas	❑ Dumpsters closed ❑ Drain holes plugged ❑ Recycling bins covered ❑ Sanitary stations bermed and protected from tipping ❑ Other:_____ ❑ _____ ❑ _____
❑ Trade operations	❑ Exterior operations shut down for event (ex: no concrete pours or paving) ❑ Do not apply soil treatments (ex: fertilizer) within 24 hours of event ❑ Materials and equipment (ex: tools) properly stored and covered ❑ Waste and debris disposed in covered dumpsters or removed from site ❑ Trenches and excavations protected ❑ Perimeter controls around disturbed areas ❑ Cover and berm fueling and repair areas ❑ Other:_____ ❑ _____ ❑ _____
❑ Site ESC BMPs	❑ Adequate capacity in sediment basins and traps ❑ Site perimeter controls in place ❑ Catch basin and drop inlet protection in place ❑ Deploy temporary erosion control on inactive areas ❑ Deploy temporary perimeter control around disturbed areas or stockpiles ❑ Sweep roads; stabilize site ingress and egress points ❑ Other:_____ ❑ _____ ❑ _____
❑ Concrete rinse out area	❑ Adequate capacity for rain ❑ Cover wash-out bins ❑ Other:_____ ❑ _____ ❑ _____

❑ Spill and drips	❑ Clean up all incident spills and drips, including paint, stucco, fuel, and oil ❑ Empty drip pans ❑ Other:_____ ❑ _____ ❑ _____

❑ Other / Discussion / Diagrams	❑ _____ ❑ _____ ❑ _____ ❑ _____ ❑ _____ ❑ _____ ❑ _____ ❑ _____ ❑ _____ ❑ _____ ❑ _____ ❑ _____ ❑ _____

I certify under penalty of law that this Rain Event Action Plan (REAP) will be performed in accordance with the General Permit by me or under my direction or supervision in accordance with a system designed to assure that qualified personnel properly gathered and evaluated the information submitted. Based on my inquiry of the persons who manage the system, or those persons directly responsible for gathering the information, the information submitted is, to the best of my knowledge and belief, true, accurate, and complete. I am aware that there are significant penalties for submitting false information, including the possibility of fine and imprisonment for knowing violations.

_____ Date: _____

Site Storm Water Manager Signature (Use ink please)

Date: _____20_____ WDID Number: [ ]

Rain Event Action Plan (REAP)
Inactive Construction Sites

Halted, or postponed construction activities. This form to be reviewed and completed by the qualified SWPPP practitioner within 48 hours prior to a rain event during the time period a site is designated inactive.

Site Information:

_____

Site Name, City and Zip Code □ Risk Level 2 □ Risk Level 3

Site Storm Water Manager Information:

_____

Name, Company and Emergency Phone Number (24/7)

Erosion and Sediment Control Provider – Labor Force Contracted for the Site:

_____

Name, Company and Emergency Phone Number (24/7)

Storm Water Sampling Agent Information:

_____

Name, Company and Emergency Phone Number (24/7)

Trades Active on Site During Inactive Construction

Check ALL the boxes below that apply to your site.

- ❑ E&S Control Device Installation
- ❑ E&S Control Device Maintenance
- ❑ Other:
- ❑ Routine Site inspections
- ❑ Street Sweeping
- ❑ Other:
- ❑ Trash Removal
- ❑ Other:
- ❑ Other:

Trade Contractor Information Provided

- ❑ Educational Material Handout
- ❑ Contractual Language
- ❑ Other:
- ❑ Tailgate Meetings
- ❑ Fines and Penalties
- ❑ Other:
- ❑ Training Workshop
- ❑ Signage
- ❑ Other:

Rain Event Action Plan (REAP)
Inactive Construction Sites

Predicted Rain Event Triggered Actions

Below is a list of suggested actions for this project phase. Each active Trade should check all material storage areas, stockpiles, waste management areas, vehicle and equipment storage and maintenance, areas of active soil disturbance, and areas of active work to ensure the proper implementation of BMPs. Project-wide BMPs should be checked and cross-referenced to the BMP progress map.

Trade or Activity	Suggested action(s) to review before rain event
❑ Information & Scheduling	❑ Inform trade supervisors of predicted rain ❑ Check scheduled activities and rescheduled as needed ❑ Alert erosion/sediment control provider ❑ Alert sample collection contractor (if applicable) ❑ Schedule staff for extended rain inspections (including weekends & holidays) ❑ Check Erosion and Sediment Control (ESC) material stock ❑ Review BMP map ❑ Other:_____ ❑ _____ ❑ _____
❑ Material storage areas	❑ Material under cover or in sheds (ex: treated woods and metals) ❑ Perimeter control around stockpiles ❑ Other:_____ ❑ _____ ❑ _____
❑ Waste management areas	❑ Dumpsters closed ❑ Drain holes plugged ❑ Recycling bins covered ❑ Sanitary stations bermed and protected from tipping ❑ Other:_____ ❑ _____ ❑ _____
❑ Trade operations	❑ Exterior operations shut down for event (ex: no concrete pours or paving) ❑ Do not apply soil treatments (ex: fertilizer) within 24 hours of event ❑ Materials and equipment (ex: tools) properly stored and covered ❑ Waste and debris disposed in covered dumpsters or removed from site ❑ Trenches and excavations protected ❑ Perimeter controls around disturbed areas ❑ Cover and berm fueling and repair areas ❑ Other:_____ ❑ _____ ❑ _____
❑ Site ESC BMPs	❑ Adequate capacity in sediment basins and traps ❑ Site perimeter controls in place ❑ Catch basin and drop inlet protection in place ❑ Deploy temporary erosion control on inactive areas ❑ Deploy temporary perimeter control around disturbed areas or stockpiles ❑ Sweep roads; stabilize site ingress and egress points ❑ Other:_____ ❑ _____ ❑ _____

❑ Other / Discussion / Diagrams	❑ _____ ❑ _____ ❑ _____

	❑ _____ ❑ _____ ❑ _____ ❑ _____ ❑ _____ ❑ _____ ❑ _____ ❑ _____ ❑ _____ ❑ _____

I certify under penalty of law that this Rain Event Action Plan (REAP) will be performed in accordance with the General Permit by me or under my direction or supervision in accordance with a system designed to assure that qualified personnel properly gathered and evaluated the information submitted. Based on my inquiry of the persons who manage the system, or those persons directly responsible for gathering the information, the information submitted is, to the best of my knowledge and belief, true, accurate, and complete. I am aware that there are significant penalties for submitting false information, including the possibility of fine and imprisonment for knowing violations.

_____ Date: _____

Site Storm Water Manager Signature (Use ink please)